Aircraft Communications and Navigation Systems:

Principles, Operation and Maintenance

Weather radar and ILS antennas in the nose radome of a Boeing 757 aircraft

Aircraft Communications and Navigation Systems:
Principles, Operation and Maintenance

Mike Tooley and David Wyatt

ELSEVIER

AMSTERDAM • BOSTON • HEIDELBERG • LONDON • NEW YORK • OXFORD
PARIS • SAN • DIEGO • SAN FRANCISCO • SINGAPORE • SYDNEY • TOKYO
Butterworth-Heinemann is an imprint of Elsevier

BUTTERWORTH HEINEMANN

Butterworth-Heinemann is an imprint of Elsevier
Linacre House, Jordan Hill, Oxford OX2 8DP, UK
30 Corporate Drive, Suite 400, Burlington, MA 01803, USA

First edition 2007

Copyright © 2007, Mike Tooley and David Wyatt. Published by Elsevier 2007.
All rights reserved

The right of Mike Tooley and David Wyatt to be identified as the authors of this work has been asserted in accordance with the Copyright, Designs and Patents Act 1988

No part of this publication may be reproduced, stored in a retrieval system or transmitted in any form or by any means electronic, mechanical, photocopying, recording or otherwise without the prior written permission of the publisher. Permissions may be sought directly from Elsevier's Science & Technology Rights Department in Oxford, UK: phone (+44) (0) 1865 843830; fax (+44) (0) 1865 853333; email: permissions@elsevier.com. Alternatively you can submit your request online by visiting the Elsevier web site at http://elsevier.com/locate/permissions, and selecting *Obtaining permission to use Elsevier material*

Notice

No responsibility is assumed by the publisher for any injury and/or damage to persons or property as a matter of products liability, negligence or otherwise, or from any use or operation of any methods, products, instructions or ideas contained in the material herein. Because of rapid advances in the medical sciences, in particular, independent verification of diagnoses and drug dosages should be made

British Library Cataloguing in Publication Data
A catalogue record for this book is available from the British Library

Library of Congress Cataloging-in-Publication Data
A catalog record for this book is available from the Library of Congress

For information on all Elsevier Butterworth-Heinemann publications
visit our web site at books.elsevier.com

Typeset by the author

ISBN: 978-0-7506-81377

Working together to grow
libraries in developing countries
www.elsevier.com | www.bookaid.org | www.sabre.org
ELSEVIER BOOK AID International Sabre Foundation

Contents

Preface **xi**

Acknowledgements **xiv**

Online resources **xiv**

Chapter 1 Introduction **1**
1.1 The radio frequency spectrum 1
1.2 Electromagnetic waves 3
1.3 Frequency and wavelength 4
1.4 The atmosphere 4
1.5 Radio wave propagation 5
1.6 The ionosphere 7
1.7 MUF and LUF 10
1.8 Silent zone and skip distance 12
1.9 Multiple choice questions 13

Chapter 2 Antennas **15**
2.1 The isotropic radiator 15
2.2 The half-wave dipole 16
2.3 Impedance and radiation resistance 18
2.4 Radiated power and efficiency 19
2.5 Antenna gain 19
2.6 The Yagi beam antenna 20
2.7 Directional characteristics 22
2.8 Other practical antennas 24
2.9 Feeders 28
2.10 Connectors 32
2.11 Standing wave ratio 33
2.12 Waveguide 38
2.13 Multiple choice questions 39

Chapter 3 Transmitters and receivers **41**
3.1 A simple radio system 41
3.2 Modulation and demodulation 42
3.3 AM transmitters 43
3.4 FM transmitters 44
3.5 Tuned radio frequency receivers 45
3.6 Superhet receivers 46
3.7 Selectivity 47
3.8 Image channel rejection 50
3.9 Automatic gain control 51
3.10 Double superhet receivers 51
3.11 Digital frequency synthesis 53
3.12 A design example 55
3.13 Multiple choice questions 59

Chapter 4 VHF communications 61
4.1 VHF range and propagation 61
4.2 DSB modulation 62
4.3 Channel spacing 63
4.4 Depth of modulation 63
4.5 Compression 64
4.6 Squelch 65
4.7 Data modes 65
4.8 ACARS 68
4.9 VHF radio equipment 70
4.10 Multiple choice questions 72

Chapter 5 HF communications 73
5.1 HF range and propagation 73
5.2 SSB modulation 74
5.3 SELCAL 76
5.4 HF data link 76
5.5 HF radio equipment 80
5.6 HF antennas and coupling units 81
5.7 Multiple choice questions 84

Chapter 6 Flight-deck audio systems 85
6.1 Flight interphone system 85
6.2 Cockpit voice recorder 90
6.3 Multiple choice questions 92

Chapter 7 Emergency locator transmitters 93
7.1 Types of ELT 93
7.2 Maintenance and testing of ELT 94
7.3 ELT mounting requirements 95
7.4 Typical ELT 97
7.5 Cospas–Sarsat satellites 98
7.6 Multiple choice questions 100

Chapter 8 Aircraft navigation 101
8.1 The earth and navigation 101
8.2 Dead reckoning 104
8.3 Position fixing 105
8.4 Maps and charts 106
8.5 Navigation terminology 107
8.6 Navigation systems development 107
8.7 Navigation systems summary 114
8.8 Multiple choice questions 116

Chapter 9 Automatic direction finder 117
9.1 Introducing ADF 117
9.2 ADF principles 117
9.3 ADF equipment 118
9.4 Operational aspects of ADF 122
9.5 Multiple choice questions 125

Chapter 10 VHF omnidirectional range 127
10.1 VOR principles 127
10.2 Airborne equipment 131
10.3 Operational aspects of VOR 136
10.4 Multiple choice questions 139

Chapter 11 Distance measuring equipment 141
11.1 Radar principles 141
11.2 DME overview 142
11.3 DME operation 143
11.4 Equipment overview 143
11.5 En route navigation using radio navigation aids 145
11.6 Multiple choice questions 149

Chapter 12 Instrument landing system 151
12.1 ILS overview 151
12.2 ILS ground equipment 151
12.3 ILS airborne equipment 155
12.4 Low range radio altimeter 159
12.5 ILS approach 160
12.6 Autoland 160
12.7 Operational aspects of the ILS 161
12.8 Multiple choice questions 162

Chapter 13 Microwave landing system 163
13.1 MLS overview 163
13.2 MLS principles 163
13.3 Aircraft equipment 166
13.4 Ground equipment 168
13.5 MLS summary 168
13.6 Multiple choice questions 168

Chapter 14 Hyperbolic radio navigation 171
14.1 Hyperbolic position fixing 171
14.2 Loran overview 173
14.3 Loran-C operation 173
14.4 Loran-C ground equipment 175
14.5 Loran-C airborne equipment 176
14.6 Enhanced Loran (eLoran) 177
14.7 Multiple choice questions 178

Chapter 15 Doppler navigation 179
15.1 The Doppler effect 179
15.2 Doppler navigation principles 179
15.3 Airborne equipment overview 183
15.4 Typical Doppler installations 184
15.5 Doppler summary 184
15.6 Other Doppler applications 185
15.7 Multiple choice questions 186

Chapter 16 Area navigation 187
16.1 RNAV overview 187
16.2 RNAV equipment 191
16.3 Kalman filters 196
16.4 Required navigation performance 198
16.5 Multiple choice questions 199

Chapter 17 Inertial navigation systems 201
17.1 Inertial navigation principles 201
17.2 System overview 204
17.3 System description 204
17.4 Alignment process 211
17.5 Inertial navigation accuracy 214
17.6 Inertial navigation summary 214
17.7 System integration 214
17.8 Multiple choice questions 215

Chapter 18 Global navigation satellite system 217
18.1 GPS overview 217
18.2 Principles of wave propagation 217
18.3 Satellite navigation principles 217
18.4 GPS segments 218
18.5 GPS signals 221
18.6 GPS operation 221
18.7 Other GNSS 223
18.8 The future of GNSS 224
18.9 Multiple choice questions 225

Chapter 19 Flight management systems 227
19.1 FMS overview 227
19.2 Flight management computer system 227
19.3 System initialisation 230
19.4 FMCS operation 232
19.5 FMS summary 236
19.6 Multiple choice questions 237

Chapter 20 Weather radar 239
20.1 System overview 239
20.2 Airborne equipment 240
20.3 Precipitation and turbulence 243
20.4 System enhancements 251
20.5 Lightning detection 251
20.6 Multiple choice questions 252

Chapter 21 Air traffic control system 253
21.1 ATC overview 253
21.2 ATC transponder modes 254
21.3 Airborne equipment 255
21.4 System operation 256
21.5 Automatic dependent surveillance-broadcast 265
21.6 Communications, navigation and surveillance/air traffic management 267
21.7 Multiple choice questions 270

Chapter 22 Traffic alert and collision avoidance system 271
22.1 Airborne collision avoidance systems 271
22.2 TCAS overview 272
22.3 TCAS equipment 275
22.4 System operation 277
22.5 Multiple choice questions 283

Appendices 285
1 Abbreviations and acronyms 285
2 Revision papers 291
3 Answers 297
4 Decibels 303

Index 305

Preface

The books in this series have been designed for both independent and tutor assisted studies. They are particularly useful to the 'self-starter' and to those wishing to update or upgrade their aircraft maintenance licence. The series also provides a useful source of reference for those taking *ab initio* training programmes in EASA Part 147 and FAR 147 approved organisations as well as those following related programmes in further and higher education institutions.

This book is designed to cover the essential knowledge base required by certifying mechanics, technicians and engineers engaged in engineering maintenance activities on commercial aircraft. In addition, this book should appeal to members of the armed forces and others attending training and educational establishments engaged in aircraft maintenance and related aeronautical engineering programmes (including BTEC National and Higher National units as well as City and Guilds and NVQ courses).

The book provides an introduction to the principles, operation and maintenance of aircraft communications and navigation systems. The aim has been to make the subject material accessible and presented in a form that can be readily assimilated. The book provides syllabus coverage of the communications and navigation section of Module 13 (ATA 23/34). The book assumes a basic understanding of aircraft flight controls as well as an appreciation of electricity and electronics (broadly equivalent to Modules 3 and 4 of the EASA Part-66 syllabus).

It is important to realise that this book is not designed to replace aircraft maintenance manuals. Nor does it attempt to provide the level of detail required by those engaged in the maintenance of specific aircraft types. Instead it has been designed to convey the essential underpinning knowledge required by all aircraft maintenance engineers.

Chapter 1 sets the scene by providing an explanation of electromagnetic wave propagation and the radio frequency spectrum. The chapter also describes the various mechanisms by which radio waves propagate together with a detailed description of the behaviour of the ionosphere and its effect on radio signals.

Antennas are introduced in Chapter 2. This chapter explains the principles of isotropic and directional radiating elements and introduces a number of important concepts including radiation resistance, antenna impedance, radiated power, gain and efficiency. Several practical forms of antenna are described including dipoles, Yagi beam antennas, quarter wave (Marconi) antennas, corner reflectors, horn and parabolic dish radiators. Chapter 2 also provides an introduction to feeders (including coaxial cable and open-wire types), connectors and standing wave ratio (SWR). The chapter concludes with a brief introduction to waveguide systems.

Radio transmitters and receivers are the subject of Chapter 3. This chapter provides readers with an introduction to the operating principles of AM and FM transmitters as well as tuned radio frequency (TRF) and supersonic-heterodyne (superhet) receivers. Selectivity, image channel rejection and automatic gain control (AGC) are important requirements of a modern radio receiver and these topics are introduced before moving on to describe more complex receiving equipment. Modern aircraft radio equipment is increasingly based on the use of digital frequency synthesis and the basic principles of phase-locked loops and digital synthesisers are described and explained.

Very high frequency (VHF) radio has long been the primary means of communication between aircraft and the ground. Chapter 4 describes the principles of VHF communications (both voice and data). The chapter also provides an introduction to the aircraft communication addressing and reporting system (ACARS).

High frequency (HF) radio provides aircraft with an effective means of communicating over long distance oceanic and trans-polar routes. In addition, global data communication has recently

been made possible using strategically located HF data link (HFDL) ground stations. Chapter 5 describes the principles of HF radio communication as well as the equipment and technology used.

As well as communication with ground stations, modern passenger aircraft require facilities for local communication within the aircraft. Chapter 6 describes flight-deck audio systems including the interphone system and all-important cockpit voice recorder (CVR) which captures audio signals so that they can be later analysed in the event of a serious malfunction of the aircraft or of any of its systems.

The detection and location of the site of an air crash is vitally important to the search and rescue (SAR) teams and also to potential survivors. Chapter 7 describes the construction and operation of emergency locator transmitters (ELT) fitted to modern passenger aircraft. The chapter also provides a brief introduction to satellite-based location techniques.

Chapter 8 introduces the subject of aircraft navigation; this sets the scene for the remaining chapters of the book. Navigation is the science of conducting journeys over land and/or sea. This chapter reviews some basic features of the earth's geometry as it relates to navigation, and introduces some basic aircraft navigation terminology, e.g. latitude, longitude, dead reckoning etc. The chapter concludes by reviewing a range of navigation systems used on modern transport and military aircraft. Many aircraft navigation systems utilise radio frequency methods to determine a position fix; this links very well into the previous chapters of the book describing fundamental principles of radio transmitters, receivers and antennas.

Radio waves have directional characteristics as described in the early chapters of the book. This is the basis of the automatic direction finder (ADF); one of earliest forms of radio navigation that is still in use today. ADF is a short–medium range (200 nm) navigation system providing directional information. Chapter 9 looks at the historical background to radio navigation, reviews some typical ADF hardware that is fitted to modern commercial transport aircraft, and concludes with some practical aspects associated with the operational use of ADF.

During the late 1940s, it was evident to the aviation world that an accurate and reliable short-range navigation system was needed. Since radio communication systems based on very high frequency (VHF) were being successfully deployed, a decision was made to develop a radio navigation system based on VHF. This system became the VHF omnidirectional range (VOR) system, and is described in Chapter 10. This system is in widespread use throughout the world today. VOR is the basis of the current network of 'airways' that are used in navigation charts.

Chapter 11 develops this theme with a system for measuring distance to a navigation aid. The advent of radar in the 1940s led to the development of a number of navigation aids including distance measuring equipment (DME). This is a short/medium-range navigation system, often used in conjunction with the VOR system to provide accurate navigation fixes. The system is based on secondary radar principles.

ADF, VOR and DME navigation aids are installed at airfields to assist with approaches to those airfields. These navigation aids cannot however be used for precision approaches and landings. The standard approach and landing system installed at airfields around the world is the instrument landing system (ILS). Chapter 12 describes how the ILS can be used for approach through to autoland. The ILS uses a combination of VHF and UHF radio waves and has been in operation since 1946.

Chapter 13 continues with the theme of guided approaches to an airfield. There are a number of shortcomings with ILS; in 1978 the microwave landing system (MLS) was adopted as the long-term replacement. The system is based on the principle of time referenced scanning beams and provides precision navigation guidance for approach and landing. MLS provides three-dimensional approach guidance, i.e. azimuth, elevation and range. The system provides multiple approach angles for both azimuth and elevation guidance. Despite the advantages of MLS, it has not yet been introduced on a worldwide basis for commercial aircraft. Military operators of MLS often use mobile equipment that can be deployed within hours.

Long-range radio navigation systems are described in Chapter 14. These systems are based

on hyperbolic navigation; they were introduced in the 1940s to provide en route operations over oceans and unpopulated areas. Several hyperbolic systems have been developed since, including Decca, Omega and Loran. The operational use of Omega and Decca navigation systems ceased in 1997 and 2000 respectively. Loran systems are still available for use today as stand-alone systems; they are also being proposed as a complementary navigation aid for global navigation satellite systems.

Chapter 15 looks at a unique form of dead reckoning navigation system based on radar and a scientific principle called Doppler shift. This system requires no external inputs or references from ground stations. Doppler navigation systems were developed in the mid-1940s and introduced in the mid-1950s as a primary navigation system. Being self-contained, the system can be used for long distance navigation and by helicopters during hover manoeuvres.

The advent of computers, in particular the increasing capabilities of integrated circuits using digital techniques, has led to a number of advances in aircraft navigation. One example of this is the area navigation system (RNAV); this is described in Chapter 16. Area navigation is a means of combining, or filtering, inputs from one or more navigation sensors and defining positions that are not necessarily co-located with ground-based navigation aids.

A major advance in aircraft navigation came with the introduction of the inertial navigation system (INS); this is the subject of Chapter 17. The inertial navigation system is an autonomous dead reckoning system, i.e. it requires no external inputs or references from ground stations. The system was developed in the 1950s for use by the US military and subsequently the space programmes. Inertial navigation systems (INS) were introduced into commercial aircraft service during the early 1970s. The system is able to compute navigation data such as present position, distance to waypoint, heading, ground speed, wind speed, wind direction etc. The system does not need radio navigation inputs and it does not transmit radio frequencies. Being self-contained, the system can be used for long distance navigation over oceans and undeveloped areas of the globe.

Navigation by reference to the stars and planets has been employed since ancient times; aircraft navigators have utilised periscopes to take celestial fixes for long distance navigation. An artificial constellation of navigation aids was initiated in 1973 and referred to as Navstar (navigation system with timing and ranging). This global positioning system (GPS) was developed for use by the US military; it is now widely available for use in many applications including aircraft navigation. Chapter 18 looks at GPS and other global navigation satellite systems that are in use, or planned for future deployment.

The term ‘navigation’ can be applied in both the lateral and vertical senses for aircraft applications. Vertical navigation is concerned with optimising the performance of the aircraft to reduce operating costs; this is the subject of Chapter 19. During the 1980s, lateral navigation and performance management functions were combined into a single system known as the flight management system (FMS). Various tasks previously routinely performed by the crew can now be automated with the intention of reducing crew workload.

Chapter 20 reviews how the planned journey from A to B could be affected by adverse weather conditions. Radar was introduced onto passenger aircraft during the 1950s to allow pilots to identify weather conditions and subsequently re-route around these conditions for the safety and comfort of passengers. A secondary use of weather radar is the terrain-mapping mode that allows the pilot to identify features of the ground, e.g. rivers, coastlines and mountains.

Increasing traffic density, in particular around airports, means that we need a method of air traffic control (ATC) to manage the flow of traffic and maintain safe separation of aircraft. The ATC system is based on secondary surveillance radar (SSR). Ground controllers use the system to address individual aircraft. An emerging ATC technology is ADS-B, this is also covered in Chapter 21.

With ever increasing air traffic congestion, and the subsequent demands on air traffic control (ATC) resources, the risk of a mid-air collision increases. The need for improved traffic flow led to the introduction of the traffic alert and collision avoidance system (TCAS); this is the subject of

Chapter 22. TCAS is an automatic surveillance system that helps aircrews and ATC to maintain safe separation of aircraft. TCAS is an airborne system based on secondary radar that interrogates and replies directly with aircraft via a high-integrity data link. The system is functionally independent of ground stations, and alerts the crew if another aircraft comes within a predetermined time to a potential collision.

The book concludes with four useful appendices, including a comprehensive list of abbreviations and acronyms used with aircraft communications and navigation systems.

The review questions at the end of each chapter are typical of these used in CAA and other examinations. Further examination practice can be gained from the four revision papers given in Appendix 2. Other features that will be particularly useful if you are an independent learner are the 'key points' and 'test your understanding' questions interspersed throughout the text.

Acknowledgements

The authors would like to thank the following persons and organisations for permission to reproduce photographs and data in this book: Lees Avionics and Wycombe Air Centre for product/cockpit images; Trevor Diamond for the ADF, VOR and DME photographs; CMC Electronics for data and photographs of Doppler and MLS hardware; the International Loran Association (ILA) and US Coast Guard for information and data on both the existing Loran-C infrastructure and their insight into future developments; Kearfott (Guidance & Navigation Corporation) and Northrop Grumman Corporation for permission to reproduce data on their inertial navigation systems and sensors; ARINC for information relating to TCAS; ADS-B Technologies, LLC for their permission to reproduce data on automatic dependent surveillance-broadcast. Finally, thanks also go to Alex Hollingsworth, Lucy Potter and Jonathan Simpson at Elsevier for their patience, encouragement and support.

Online resources

Additional supporting material (including video clips, sound bites and image galleries) for this book are available at **www.66web.co.uk** or **www.key2study.com/66web**

Chapter 1 Introduction

Maxwell first suggested the existence of electromagnetic waves in 1864. Later, Heinrich Rudolf Hertz used an arrangement of rudimentary resonators to demonstrate the existence of electromagnetic waves. Hertz's apparatus was extremely simple and comprised two resonant loops, one for transmitting and the other for receiving. Each loop acted both as a tuned circuit and as a resonant antenna (or 'aerial').

Hertz's transmitting loop was excited by means of an induction coil and battery. Some of the energy radiated by the transmitting loop was intercepted by the receiving loop and the received energy was conveyed to a spark gap where it could be released as an arc. The energy radiated by the transmitting loop was in the form of an **electromagnetic wave**—a wave that has both electric and magnetic field components and that travels at the speed of light.

In 1894, Marconi demonstrated the commercial potential of the phenomenon that Maxwell predicted and Hertz actually used in his apparatus. It was also Marconi that made radio a reality by pioneering the development of telegraphy without wires (i.e. 'wireless'). Marconi was able to demonstrate very effectively that information could be exchanged between distant locations without the need for a 'land-line'.

Marconi's system of **wireless telegraphy** proved to be invaluable for maritime communications (ship to ship and ship to shore) and was to be instrumental in saving many lives. The military applications of radio were first exploited during the First World War (1914 to 1918) and, during that period, radio was first used in aircraft.

This first chapter has been designed to set the scene and to provide you with an introduction to the principles of radio communication systems. The various topics are developed more fully in the later chapters but the information provided here is designed to provide you with a starting point for the theory that follows.

1.1 The radio frequency spectrum

Radio frequency signals are generally understood to occupy a frequency range that extends from a few tens of kilohertz (kHz) to several hundred gigahertz (GHz). The lowest part of the radio frequency range that is of practical use (below 30 kHz) is only suitable for narrow-band communication. At this frequency, signals propagate as ground waves (following the curvature of the earth) over very long distances. At the other extreme, the highest frequency range that is of practical importance extends above 30 GHz. At these microwave frequencies, considerable bandwidths are available (sufficient to transmit many television channels using point-to-point links or to permit very high definition radar systems) and signals tend to propagate strictly along line-of-sight paths.

At other frequencies signals may propagate by various means including reflection from ionised layers in the ionosphere. At frequencies between 3 MHz and 30 MHz ionospheric propagation regularly permits intercontinental broadcasting and communications.

For convenience, the radio frequency spectrum is divided into a number of bands (see Table 1.1), each spanning a decade of frequency. The use to which each frequency range is put depends upon a number of factors, paramount amongst which is the propagation characteristics within the band concerned.

Other factors that need to be taken into account include the efficiency of practical aerial systems in the range concerned and the bandwidth available. It is also worth noting that, although it may appear from Figure 1.1 that a great deal of the radio frequency spectrum is not used, it should be stressed that competition for frequency space is fierce and there is, in fact, little vacant space! Frequency allocations are, therefore, ratified by international agreement and the various user services carefully safeguard their own areas of the spectrum.

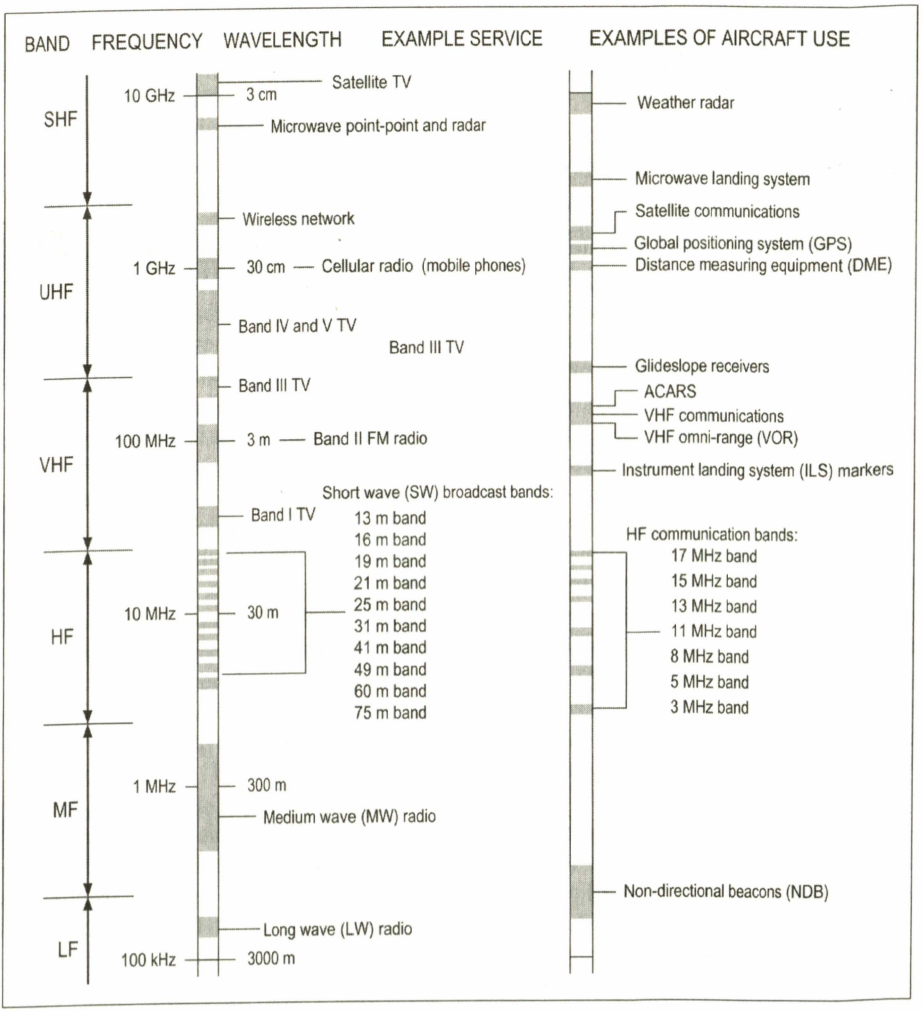

Figure 1.1 Some examples of frequency allocations within the radio frequency spectrum

Table 1.1 Frequency bands

Frequency range	*Wavelength*	*Designation*
300 Hz to 3 kHz	1000 km to 100 km	Extremely low frequency (ELF)
3 kHz to 30 kHz	100 km to 10 km	Very low frequency (VLF)
30 kHz to 300 kHz	10 km to 1 km	Low frequency (LF)
300 kHz to 3 MHz	1 km to 100 m	Medium frequency (MF)
3 MHz to 30 MHz	100 m to 10 m	High frequency (HF)
30 MHz to 300 MHz	10 m to 1 m	Very high frequency (VHF)
300 MHz to 3 GHz	1 m to 10 cm	Ultra high frequency (UHF)
3 GHz to 30 GHz	10 cm to 1 cm	Super high frequency (SHF)

1.2 Electromagnetic waves

As with light, radio waves propagate outwards from a source of energy (transmitter) and comprise electric (E) and magnetic (H) fields at right angles to one another. These two components, the **E-field** and the **H-field**, are inseparable. The resulting wave travels away from the source with the E and H lines mutually at right angles to the direction of **propagation**, as shown in Figure 1.2.

Radio waves are said to be **polarised** in the plane of the electric (E) field. Thus, if the E-field is vertical, the signal is said to be vertically polarised whereas, if the E-field is horizontal, the signal is said to be horizontally polarised.

Figure 1.3 shows the electric E-field lines in the space between a transmitter and a receiver. The transmitter aerial (a simple dipole, see page 16) is supplied with a high frequency alternating current. This gives rise to an alternating electric field between the ends of the aerial and an alternating magnetic field around (and at right angles to) it.

The direction of the E-field lines is reversed on each cycle of the signal as the **wavefront** moves outwards from the source. The receiving aerial intercepts the moving field and voltage and current is induced in it as a consequence. This voltage and current is similar (but of smaller amplitude) to that produced by the transmitter.

Note that in Figure 1.3 (where the transmitter and receiver are close together) the field is shown spreading out in a spherical pattern (this is known more correctly as the **near field**). In practice there will be some considerable distance between the transmitter and the receiver and so the wave that reaches the receiving antenna will have a plane wavefront. In this far field region the angular field distribution is essentially independent of the distance from the transmitting antenna.

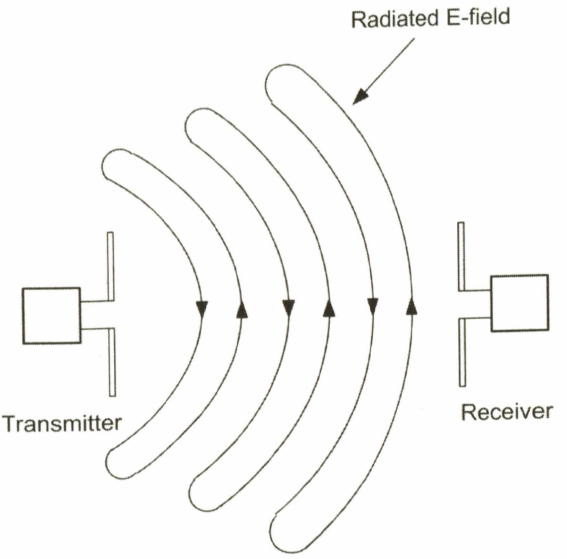

Figure 1.3 Electric field pattern in the near field region between a transmitter and a receiver (the magnetic field has not been shown but is perpendicular to the electric field)

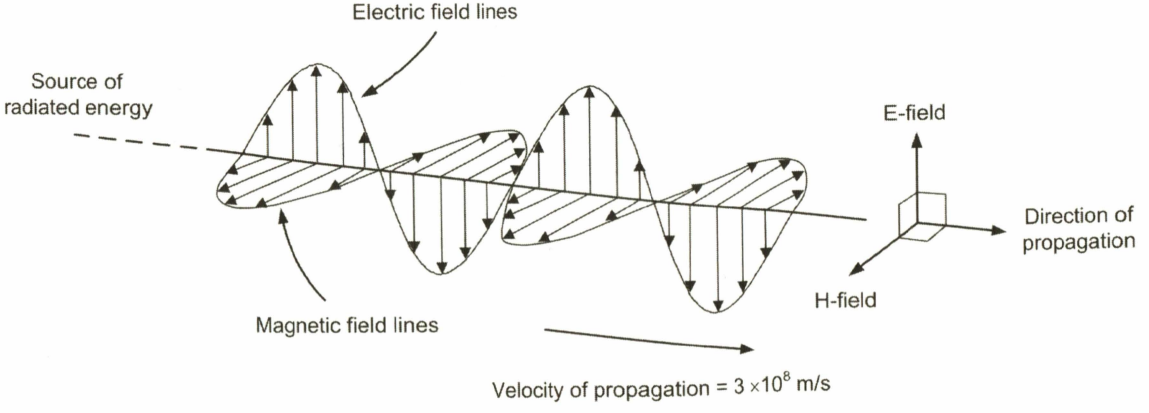

Figure 1.2 An electromagnetic wave

1.3 Frequency and wavelength

Radio waves propagate in air (or space) at the **speed of light** (300 million metres per second). The velocity of propagation, v, wavelength, λ, and frequency, f, of a radio wave are related by the equation:

$$v = f\lambda = 3\times10^8 \text{ m/s}$$

This equation can be arranged to make f or λ the subject, as follows:

$$f = \frac{3\times10^8}{\lambda} \text{ Hz} \quad \text{and} \quad \lambda = \frac{3\times10^8}{f} \text{ m}$$

As an example, a signal at a frequency of 1 MHz will have a wavelength of 300 m whereas a signal at a frequency of 10 MHz will have a wavelength of 30 m.

When a radio wave travels in a cable (rather than in air or 'free space') it usually travels at a speed that is between 60% and 80% of that of the speed of light.

Example 1.3.1

Determine the frequency of a radio signal that has a wavelength of 15 m.

Here we will use the formula $f = \dfrac{3\times10^8}{\lambda}$ Hz

Putting λ = 15 m gives:

$$f = \frac{3\times10^8}{15} = \frac{300\times10^6}{15} = 20\times10^6 \text{ Hz or 20 MHz}$$

Example 1.3.2

Determine the wavelength of a radio signal that has a frequency of 150 MHz.

In this case we will use $\lambda = \dfrac{3\times10^8}{f}$ m

Putting f = 150 MHz gives:

$$\lambda = \frac{3\times10^8}{f} = \frac{3\times10^8}{150\times10^6} = \frac{300\times10^6}{150\times10^6} = 2 \text{ m}$$

Example 1.3.3

If the wavelength of a 30 MHz signal in a cable is 8 m, determine the velocity of propagation of the wave in the cable.

Solution

Using the formula $v = f\lambda$. where v is the velocity of propagation in the cable, gives:

$$v = f\lambda = 30\times10^6 \times 8 \text{ m} = 240\times10^6 = 2.4\times10^8 \text{m/s}$$

Test your understanding 1.1

An HF communications signal has a frequency of 25.674 MHz. Determine the wavelength of the signal.

Test your understanding 1.2

A VHF communications link operates at a wavelength of 1.2 m. Determine the frequency at which the link operates.

1.4 The atmosphere

The earth's atmosphere (see Figure 1.4) can be divided into five concentric regions having boundaries that are not clearly defined. These layers, starting with the layer nearest the earth's surface, are known as the troposphere, stratosphere, mesosphere, thermosphere and exosphere.

The boundary between the troposphere and the stratosphere is known as the **tropopause** and this region varies in height above the earth's surface from about 7.5 km at the poles to 18 km at the equator. An average value for the height of the tropopause is around 11 km or 36,000 feet (about the same as the cruising height for most international passenger aircraft).

The thermosphere and the upper parts of the mesosphere are often referred to as the **ionosphere** and it is this region that has a major role to play in the long distance propagation of radio waves, as we shall see later.

The lowest part of the earth's atmosphere is called the **troposphere** and it extends from the surface up to about 10 km (6 miles). The atmosphere above 10 km is called the stratosphere, followed by the mesosphere. It is in the stratosphere that incoming solar radiation creates the ozone layer.

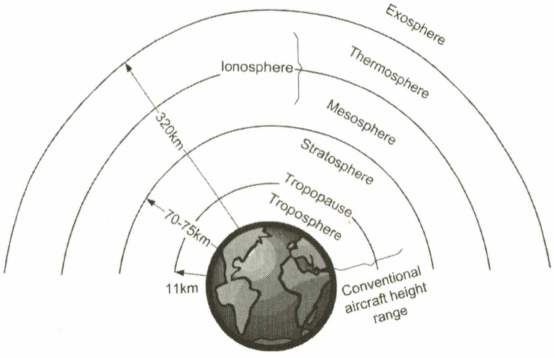

Figure 1.4 Zones of the atmosphere

1.5 Radio wave propagation

Depending on a number of complex factors, radio waves can propagate through the atmosphere in various ways, as shown in Figure 1.5. These include:

- ground waves
- ionospheric waves
- space waves
- tropospheric waves.

As their name suggests, **ground waves** (or **surface waves**) travel close to the surface of the earth and propagate for relatively short distances at HF and VHF but for much greater distances at MF and LF. For example, at 100 kHz the range of a ground wave might be in excess of 500 km, whilst at 1 MHz (using the same radiated power) the range might be no more than 150 km and at 10 MHz no more than about 15 km. Ground waves have two basic components; a **direct wave** and a **ground reflected wave** (as shown in Figure 1.6). The **direct path** is that which exists on a

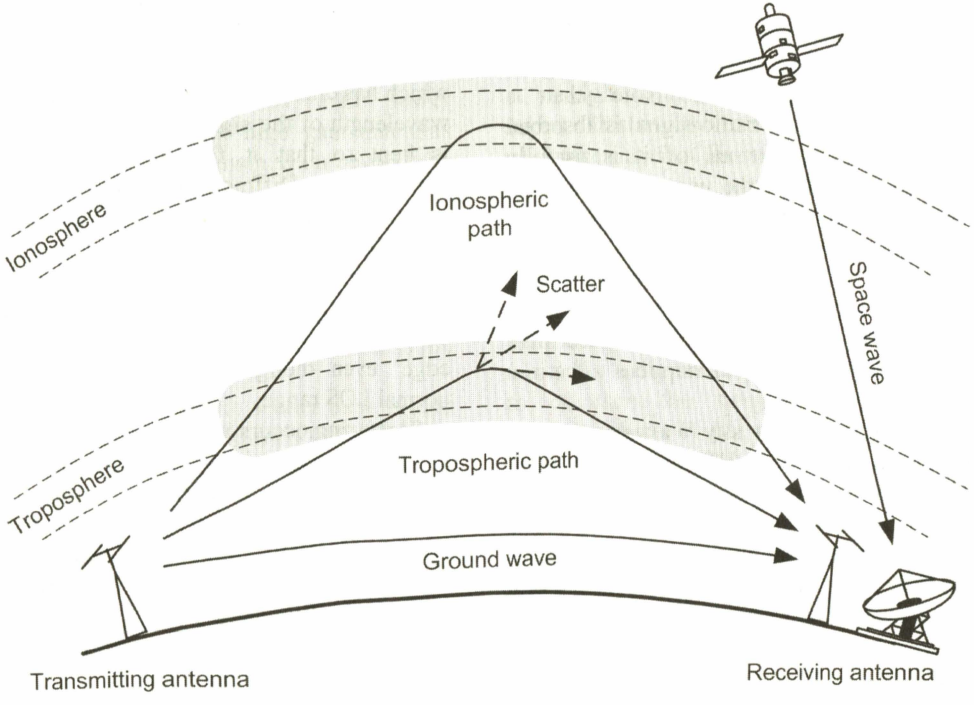

Figure 1.5 Radio wave propagation through the atmosphere

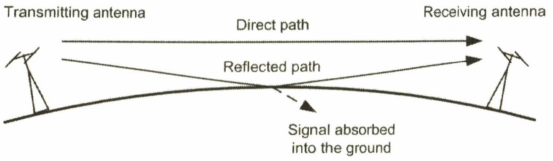

Figure 1.6 Constituents of a ground wave

line-of-sight (**LOS**) basis between the transmitter and receiver. An example of the use of a direct path is that which is used by terrestrial microwave repeater stations which are typically spaced 20 to 30 km apart on a line-of-sight basis. Another example of the direct path is that used for satellite TV reception. In order to receive signals from the satellite the receiving antenna must be able to 'see' the satellite. In this case, and since the wave travels largely undeviated through the atmosphere, the direct wave is often referred to as a **space wave**. Such waves travel over LOS paths at VHF, UHF and beyond.

As shown in Figure 1.6, signals can arrive at a receiving antenna by both the direct path and by means of reflection from the ground. **Ground reflection** depends very much on the quality of the ground with sandy soils being a poor reflector of radio signals and flat marshy ground being an excellent reflecting surface. Note that a proportion of the incident radio signal is absorbed into the ground and not all of it is usefully reflected. An example of the use of a mixture of direct path and ground (or building) reflected radio signals is the reception of FM broadcast signals in a car. It is also worth mentioning that, in many cases, the reflected signals can be stronger than the direct path (or the direct path may not exist at all if the car happens to be in a heavily built-up area).

Ionospheric waves (or **sky waves**) can travel for long distances at MF, HF and exceptionally also at VHF under certain conditions. Such waves are predominant at frequencies below VHF and we shall examine this phenomenon in greater detail a little later but before we do it is worth describing what can happen when waves meet certain types of discontinuity in the atmosphere or when they encounter a physical obstruction. In both cases, the direction of travel can be significantly affected according to the nature and size of the obstruction or discontinuity. Four different effects can occur (see Figure 1.7) and they are known as:

- reflection
- refraction
- diffraction
- scattering.

Reflection occurs when a plane wave meets a plane object that is large relative to the wavelength of the signal. In such cases the wave is reflected back with minimal distortion and without any change in velocity. The effect is similar to the reflection of a beam of light when it arrives at a mirrored surface.

Refraction occurs when a wave moves from one medium into another in which it travels at a different speed. For example, when moving from a more dense to a less dense medium the wave is bent away from the normal (i.e. an imaginary line constructed at right angles to the boundary). Conversely, when moving from a less dense to a more dense medium, a wave will bend towards the normal. The effect is similar to that experienced by a beam of light when it encounters a glass prism.

Diffraction occurs when a wave meets an edge (i.e. a sudden impenetrable surface discontinuity) which has dimensions that are large relative to the wavelength of the signal. In such cases the wave is bent so that it follows the profile of the discontinuity. Diffraction occurs more readily at lower frequencies (typically VHF and below). An example of diffraction is the bending experienced by VHF broadcast signals when they encounter a sharply defined mountain ridge. Such signals can be received at some distance beyond the 'knife edge' even though they are well beyond the normal LOS range.

Scattering occurs when a wave encounters one or more objects in its path having a size that is a fraction of the wavelength of the signal. When a wave encounters an obstruction of this type it will become fragmented and re-radiated over a wide angle. Scattering occurs more readily at higher frequencies (typically VHF and above) and regularly occurs in the troposphere at UHF and EHF.

Radio signals can also be directed upwards (by suitable choice of antenna) so that signals enter

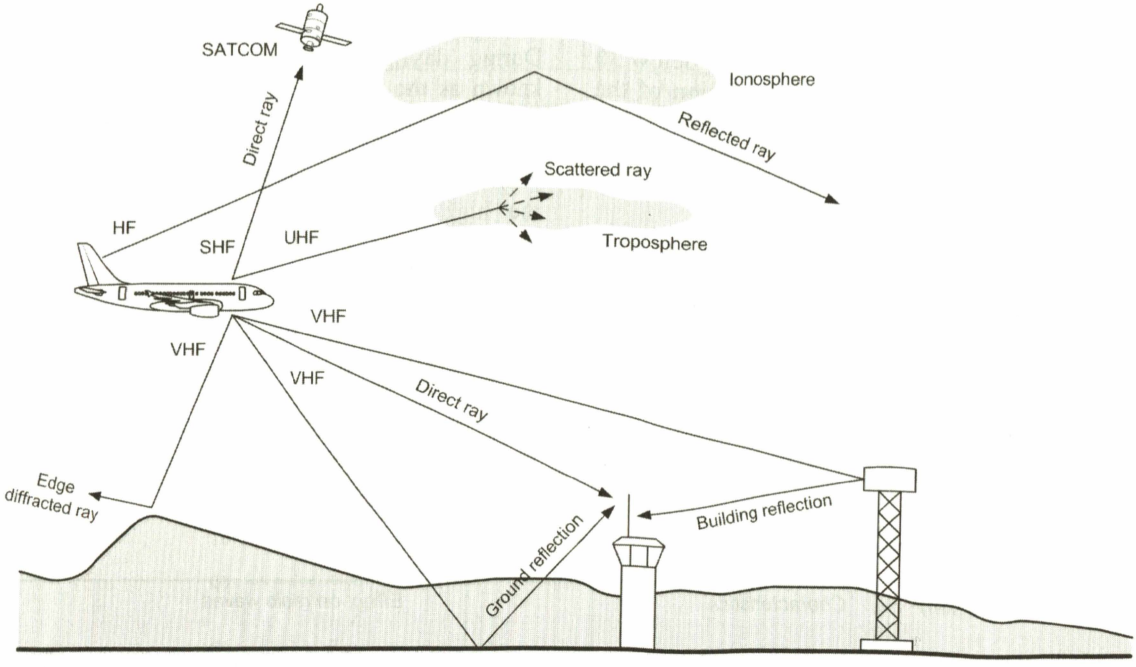

Figure 1.7 Various propagation effects

the troposphere or ionosphere. In the former case, signals can be become scattered (i.e. partially dispersed) in the troposphere so that a small proportion arrives back at the ground. **Tropospheric scatter** requires high power transmitting equipment and high gain antennas but is regularly used for transmission beyond the horizon particularly where conditions in the troposphere (i.e. rapid changes of temperature and humidity with height) can support this mode of communication. Tropospheric scatter of radio waves is analogous to the scattering of a light beam (e.g. a torch or car headlights) when shone into a heavy fog or mist.

In addition to tropospheric scatter there is also **tropospheric ducting** (not shown in Figure 1.7) in which radio signals can become trapped as a result of the change of refractive index at a boundary between air masses having different temperature and humidity. Ducting usually occurs when a large mass of cold air is overrun by warm air (this is referred to as a temperature inversion). Although this condition may occur frequently in certain parts of the world, this mode of propagation is not very predictable and is therefore not used for any practical applications.

1.6 The ionosphere

In 1924, Sir Edward Appleton was one of the first to demonstrate the existence of a reflecting layer at a height of about 100 km (now called the E-layer). This was soon followed by the discovery of another layer at around 250 km (now called the F-layer). This was achieved by broadcasting a continuous signal from one site and receiving the signal at a second site several miles away. By measuring the time difference between the signal received along the ground and the signal reflected from the atmosphere (and knowing the velocity at which the radio wave propagates) it was possible to calculate the height of the atmospheric reflecting layer. Today, the standard technique for detecting the presence of ionised layers (and determining their height above the surface of the earth) is to transmit a very short pulse directed upwards into space and accurately measuring the amplitude and time delay before the arrival back on earth of the reflected pulses. This **ionospheric sounding** is carried out over a range of frequencies.

The ionosphere provides us with a reasonably predictable means of communicating over long

distances using HF radio signals. Much of the short and long distance communications below 30 MHz depend on the bending or refraction of the transmitted wave in the earth's ionosphere which are regions of ionisation caused by the sun's ultraviolet radiation and lying about 60 to 200 miles above the earth's surface.

The useful regions of ionisation are the E-layer (at about 70 miles in height for maximum ionisation) and the F-layer (lying at about 175 miles in height at night). During the daylight hours, the F-layer splits into two distinguishable parts: F_1 (lying at a height of about 140 miles) and F_2 (lying at a height of about 200 miles). After sunset the F_1- and F_2-layers recombine into a single F-layer (see Figures 1.8 and 1.10). During daylight, a lower layer of ionisation known as the D-layer exists in proportion to the sun's height, peaking at local noon and largely dissipating after sunset. This lower layer primarily acts to absorb energy in the low end of the high frequency (HF) band. The F-layer ionisation regions are primarily responsible for long distance communication using **sky waves** at distances of up to several thousand km (greatly in excess of those distances that can be achieved using VHF **direct wave** communication, see Figure 1.9). The characteristics of the ionised layers are summarised in Table 1.2 together with their effect on radio waves.

Table 1.2 Ionospheric layers

Layer	*Height (km)*	*Characteristics*	*Effect on radio waves*
D	50 to 95 km	Develops shortly after sunrise and disappears shortly after sunset. Reaches maximum ionisation when the sun is at its highest point in the sky	Responsible for the absorption of radio waves at lower frequencies (e.g. below 4 MHz) during daylight hours
E	95 to 150 km	Develops shortly after sunrise and disappears a few hours after sunset. The maximum ionisation of this layer occurs at around midday	Reflects waves having frequencies less than 5 MHz but tends to absorb radio signals above this frequency
E_S	80 to 120 km	An intense region of ionisation that sometimes appears in the summer months (peaking in June and July). Usually lasts for only a few hours (often in the late morning and recurring in the early evening of the same day)	Highly reflective at frequencies above 30 MHz and up to 300 MHz on some occasions. Of no practical use other than as a means of long distance VHF communication for radio amateurs
F	250 to 450 km	Appears a few hours after sunset, when the F_1- and F_2-layers (see below) merge to form a single layer	Reflects radio waves up to 20 MHz and occasionally up to 25 MHz
F_1	150 to 200 km	Occurs during daylight hours with maximum ionisation reached at around midday. The F_1-layer merges with the F_2-layer shortly after sunset	Reflects radio waves in the low HF spectrum up to about 10 MHz
F_2	250 to 450 km	Develops just before sunrise as the F-layer begins to divide. Maximum ionisation of the F_2-layer is usually reached one hour after sunrise and it typically remains at this level until shortly after sunset. The intensity of ionisation varies greatly according to the time of day and season and is also greatly affected by solar activity	Capable of reflecting radio waves in the upper HF spectrum with frequencies of up to 30 MHz and beyond during periods of intense solar activity (i.e. at the peak of each 11-year sunspot cycle)

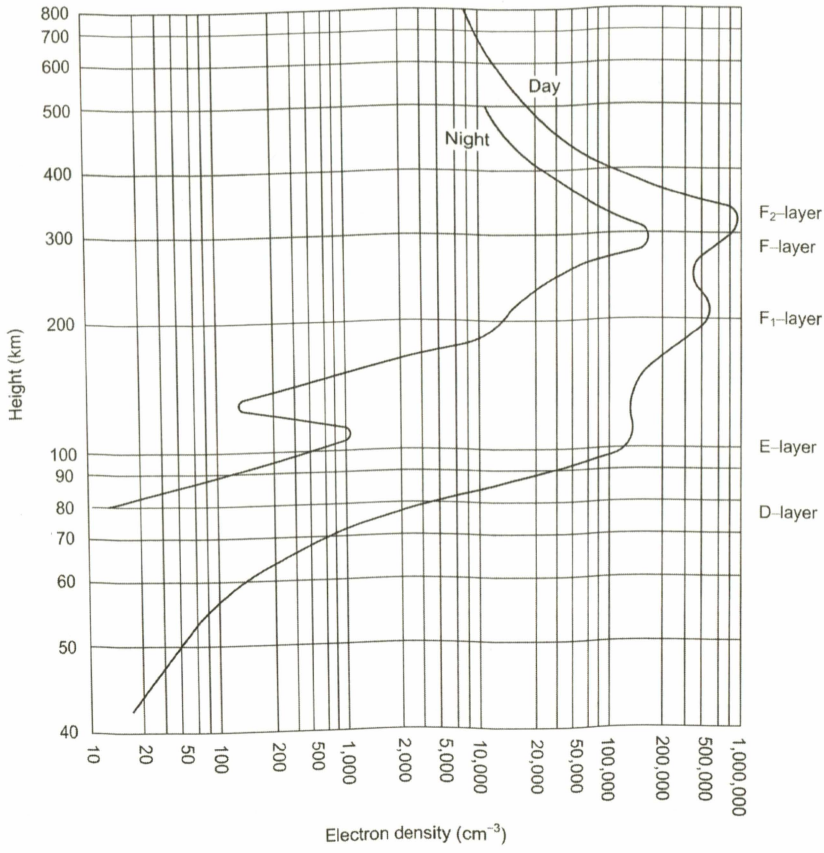

Figure 1.8 Typical variation of electron density versus height (note the use of logarithmic scales for both height and electron density)

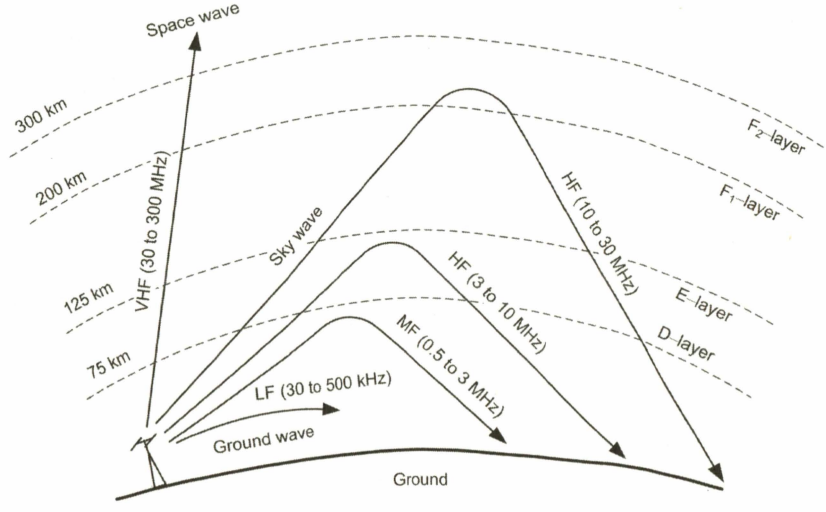

Figure 1.9 Effect of ionised layers on radio signals at various frequencies

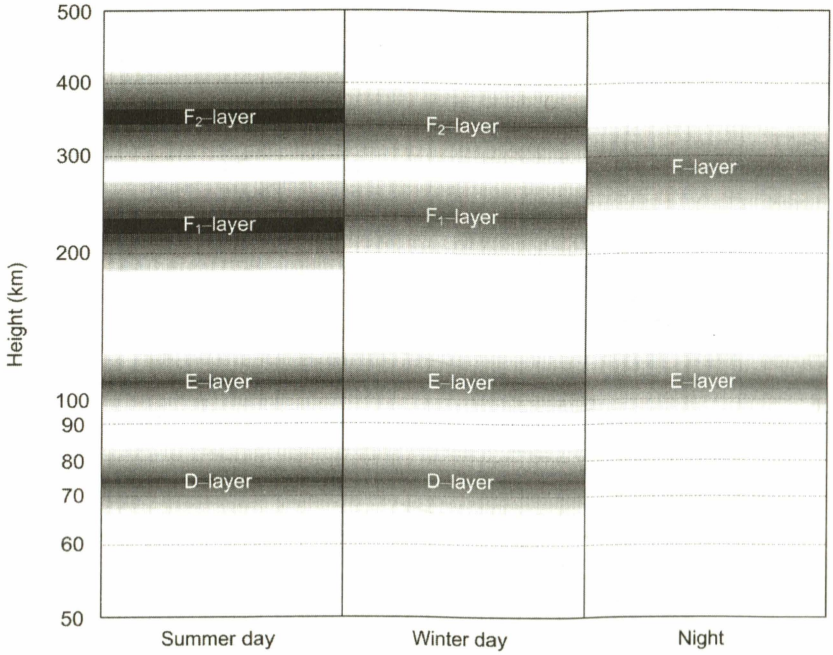

Figure 1.10 Position of ionised layers at day and night

1.7 MUF and LUF

The **maximum usable frequency** (**MUF**) is the highest frequency that will allow communication over a given path at a particular time and on a particular date. MUF varies considerably with the amount of solar activity and is basically a function of the height and intensity of the F-layer. During a period of intense solar activity the MUF can exceed 30 MHz during daylight hours but is often around 16 to 20 MHz by day and around 8 to 10 MHz by night.

The variation of MUF over a 24-hour period for the London to New York path is shown in Figure 1.11. A similar plot for the summer months would be flatter with a more gradual increase in MUF at dawn and a more gradual decline at dusk.

The reason for the significant variation of MUF over any 24-hour period is that the intensity of ionisation in the upper atmosphere is significantly reduced at night and, as a consequence, lower frequencies have to be used to produce the same amount of refractive bending and also to give the same critical angle and skip distance as by day. Fortunately, the attenuation experienced by lower frequencies travelling in the ionosphere is much reduced at night and this makes it possible to use the lower frequencies required for effective communication. The important fact to remember from this is simply that, for a given path, the frequency used at night is about half that used for daytime communication.

The **lowest usable frequency** (**LUF**) is the lowest frequency that will support communication over a given path at a particular time and on a particular date. LUF is dependent on the amount of absorption experienced by a radio wave. This absorption is worse when the D-layer is most intense (i.e. during daylight). Hence, as with MUF, the LUF rises during the day and falls during the night. A typical value of LUF is 4 to 6 MHz during the day, falling rapidly at sunset to 2 MHz.

The frequency chosen for HF communication must therefore be somewhere above the LUF and below the MUF for a given path, day and time. A typical example might be a working frequency of 5 MHz at a time when the MUF is 10 MHz and the LUF is 2 MHz.

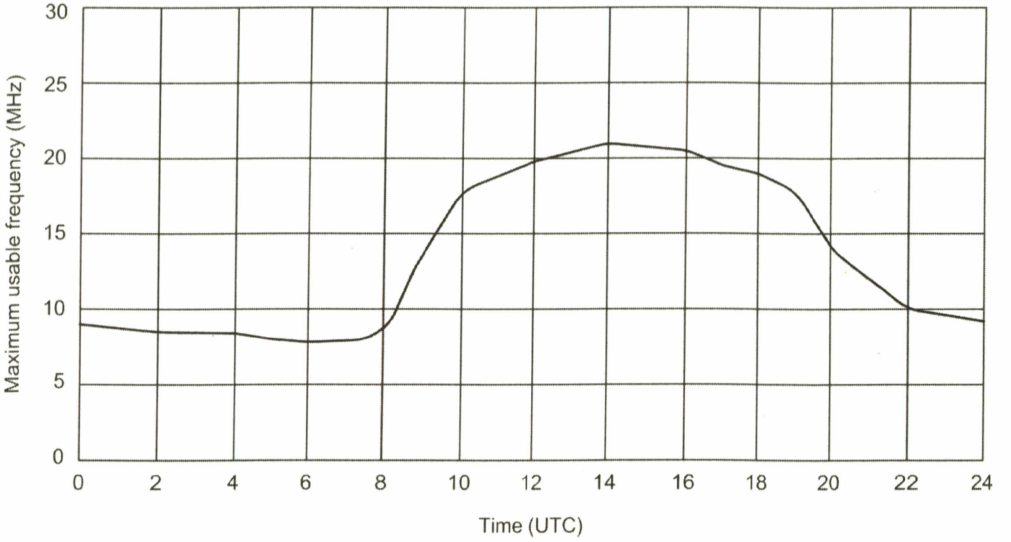

Figure 1.11 Variation of MUF with time for London–New York on 16th October 2006

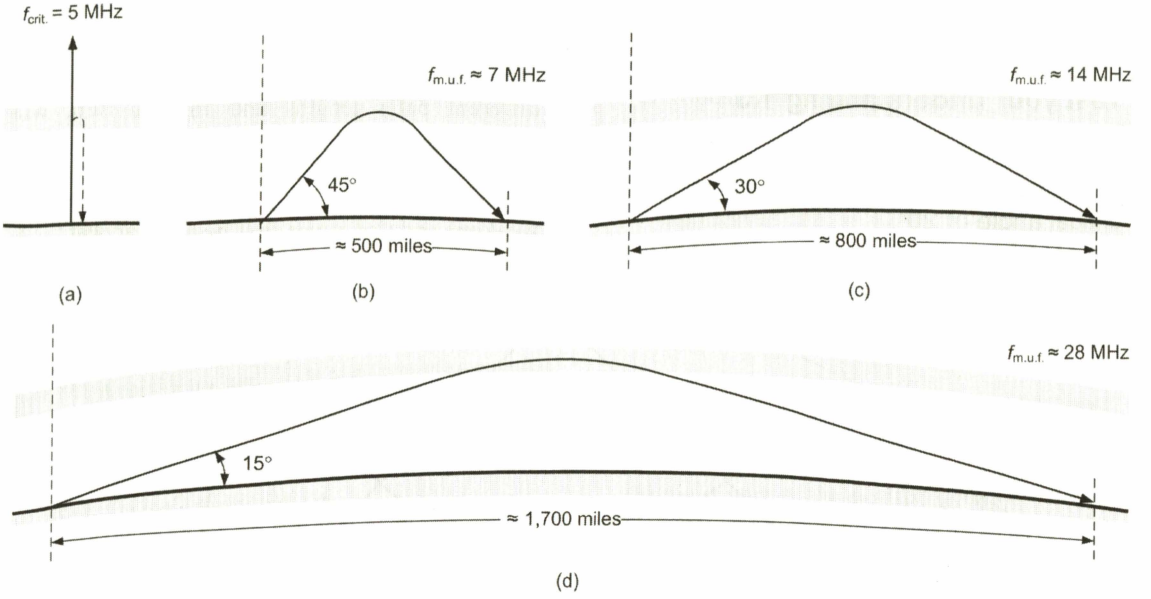

Figure 1.12 Effect of angle of attack on range and MUF

Figure 1.12 shows the typical MUF for various angles of attack together with the corresponding working ranges. This diagram assumes a **critical frequency** of 5 MHz. This is the lowest frequency that would be returned from the ionosphere using a path of vertical incidence (see ionospheric sounding on page 7).

The relationship between the critical frequency, $f_{crit.}$, and electron density, N, is given by:

$$f_{crit.} = 9 \times 10^{-3} \times \sqrt{N}$$

where N is the electron density expressed in cm^3.

The angle of attack, α, is the angle of the transmitted wave relative to the horizon.

The relationship between the MUF, $f_{m.u.f.}$, the critical frequency, $f_{crit.}$, and the angle of attack, α, is given by:

$$f_{m.u.f.} = \frac{f_{crit.}}{\sin \alpha}$$

Example 1.8.1

Given that the electron density in the ionosphere is 5×10^5 electrons per cm^3, determine the critical frequency and the MUF for an angle of attack of 15°.

Now using the relationship $f_{crit.} = 9 \times 10^{-3} \times \sqrt{N}$ gives:

$$f_{crit.} = 9 \times 10^{-3} \times \sqrt{5 \times 10^5} = 6.364 \text{ MHz}$$

The MUF can now be calculated using:

$$f_{m.u.f.} = \frac{f_{crit.}}{\sin \alpha} = \frac{6.364}{\sin 15°} = \frac{6.364}{0.259} = 24.57 \text{ MHz}$$

Test your understanding 1.3

Determine the electron density in the ionosphere when the MUF is 18 MHz for a critical angle of 20°.

1.8 Silent zone and skip distance

The **silent zone** is simply the region that exists between the extent of the coverage of the ground wave signal and the point at which the sky wave returns to earth (see Figure 1.13). Note also that, depending on local topography and soil characteristics, when a signal returns to earth from the ionosphere it is sometimes possible for it to experience a reflection from the ground, as shown in Figure 1.13. The onward reflected signal will suffer attenuation but in some circumstances may be sufficient to provide a further hop and an approximate doubling of the working range. The condition is known as **multi-hop** propagation.

The **skip distance** is simply the distance between the point at which the sky wave is radiated and the point at which it returns to earth (see Figure 1.14).

Note that where signals are received simultaneously by ground wave and sky wave paths, the signals will combine both constructively and destructively due to the different paths lengths and this, in turn, will produce an effect known as **fading**. This effect can often be heard during the early evening on medium wave radio signals as the D-layer weakens and sky waves first begin to appear.

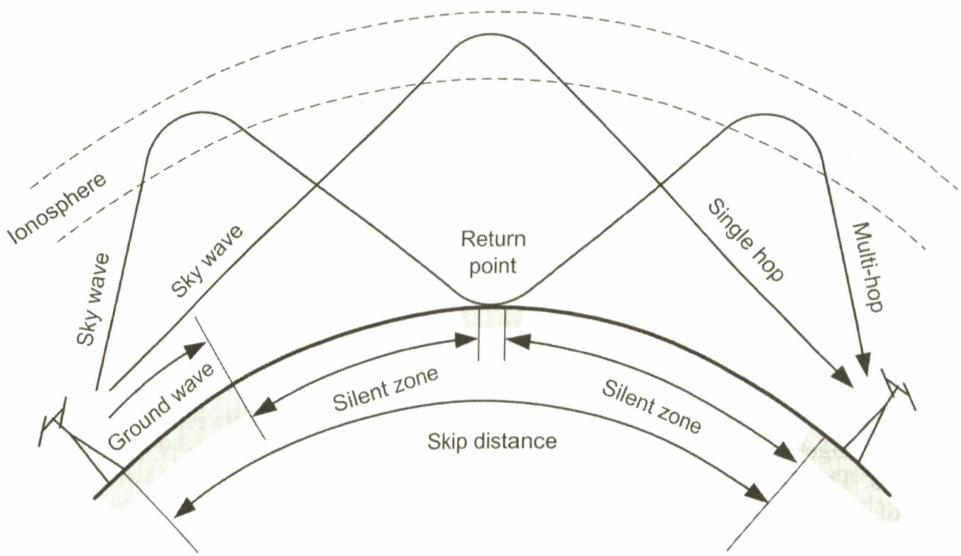

Figure 1.13 Silent zone and skip distance

Table 1.3 See Test your understanding 1.4

Time (UTC)	0	1	2	3	4	5	6	7	8	9	10	11	12
MUF (MHz)	9.7	9.0	8.4	7.9	7.5	9.6	12.3	14.1	15.4	16.4	17.1	17.6	17.9

Time (UTC)	13	14	15	16	17	18	19	20	21	22	23	24
MUF (MHz)	18.1	18.1	17.9	17.7	17.2	16.5	15.6	14.2	12.7	11.5	10.6	9.7

Test your understanding 1.4

Table 1.3 shows corresponding values of time and maximum usable frequency (MUF) for London to Lisbon on 28th August 2006. Plot a graph showing the variation of MUF with time and explain the shape of the graph.

Test your understanding 1.5

Explain the following terms in relation to HF radio propagation:

(a) silent zone
(b) skip distance
(c) multi-hop propagation.

1.9 Multiple choice questions

1. A transmitted radio wave will have a plane wavefront:
   (a) in the near field
   (b) in the far field
   (c) close to the antenna.

2. The lowest layer in the earth's atmosphere is:
   (a) the ionosphere
   (b) the stratosphere
   (c) the troposphere.

3. A radio wave at 115 kHz is most likely to propagate as:
   (a) a ground wave
   (b) a sky wave
   (c) a space wave.

4. The height of the E-layer is approximately:
   (a) 100 km
   (b) 200 km
   (c) 400 km.

5. When a large mass of cold air is overrun by warm air the temperature inversion produced will often result in:
   (a) ionospheric reflection
   (b) stratospheric refraction
   (c) tropospheric ducting.

6. Ionospheric sounding is used to determine:
   (a) the maximum distance that a ground wave will travel
   (b) the presence of temperature inversions in the upper atmosphere
   (c) the critical angle and maximum usable frequency for a given path.

7. The critical frequency is directly proportional to:
   (a) the electron density
   (b) the square of the electron density
   (c) the square root of the electron density.

8. The MF range extends from:
   (a) 300 kHz to 3 MHz
   (b) 3 MHz to 30 MHz
   (c) 30 MHz to 300 MHz.

9. A radio wave has a frequency of 15 MHz. Which one of the following gives the wavelength of the wave?
   (a) 2 m
   (b) 15 m
   (c) 20 m.

10. Which one of the following gives the velocity at which a radio wave propagates?
(a) 300 m/s
(b) 3×10^8 m/s
(c) 3 million m/s.

11. The main cause of ionisation in the upper atmosphere is:
(a) solar radiation
(b) ozone
(c) currents of warm air.

12. The F_2-layer is:
(a) higher at the equator than at the poles
(b) lower at the equator than at the poles
(c) the same height at the equator as at the poles.

13. The free-space path loss experienced by a radio wave:
(a) increases the frequency but decreases with distance
(b) decreases with frequency but increases with distance
(c) increases with both frequency and distance.

14. For a given HF radio path, the MUF changes most rapidly at:
(a) mid-day
(b) mid-night
(c) dawn and dusk.

15. Radio waves tend to propagate mainly as line-of-sight signals in the:
(a) MF band
(b) HF band
(c) VHF band.

16. In the HF band radio waves tend to propagate over long distances as:
(a) ground waves
(b) space waves
(c) ionospheric waves.

17. The maximum distance that can be achieved from a single-hop reflection from the F-layer is in the region:
(a) 500 to 2,000 km
(b) 2,000 to 3,500 km
(c) 3,500 to 5,000 km

18. The F_1- and F_2-layers combine:
(a) only at about mid-day
(b) during the day
(c) during the night.

19. The path of a VHF or UHF radio wave can be bent by a sharply defined obstruction such as a building or a mountain top. This phenomenon is known as:
(a) ducting
(b) reflection
(c) diffraction.

20. Radio waves at HF can be subject to reflections in ionised regions of the upper atmosphere. This phenomenon is known as:
(a) ionospheric reflection
(b) tropospheric scatter
(c) atmospheric ducting.

21. Radio waves at UHF can sometimes be subject to dispersion over a wide angle in regions of humid air in the atmosphere. This phenomenon is known as:
(a) ionospheric reflection
(b) tropospheric scatter
(c) atmospheric ducting.

22. Radio waves at VHF and UHF can sometimes propagate for long distances in the lower atmosphere due to the presence of a temperature inversion. This phenomenon is known as:
(a) ionospheric reflection
(b) tropospheric scatter
(c) atmospheric ducting.

23. The layer in the atmosphere that is mainly responsible for the absorption of MF radio waves during the day is:
(a) the D-layer
(b) the E-layer
(c) the F-layer.

24. The layer in the atmosphere that is mainly responsible for the reflection of HF radio waves during the day is:
(a) the D-layer
(b) the E-layer
(c) the F-layer.

Chapter 2 Antennas

It may not be apparent from an inspection of the external profile of an aircraft that most large aircraft carry several dozen antennas of different types. To illustrate this point, Figure 2.1 shows just a few of the antennas carried by a Boeing 757. What should be apparent from this is that many of the antennas are of the low profile variety which is essential to reduce drag.

Antennas are used both for transmission and reception. A transmitting antenna converts the high frequency electrical energy supplied to it into electromagnetic energy which is launched or radiated into the space surrounding the antenna. A receiving antenna captures the electromagnetic energy in the surrounding space and converts this into high frequency electrical energy which is then passed on to the receiving system. The **law of reciprocity** indicates that an antenna will have the same gain and directional properties when used for transmission as it does when used for reception.

2.1 The isotropic radiator

The most fundamental form of antenna (which cannot be realised in practice) is the isotropic radiator. This theoretical type of antenna is often used for comparison purposes and as a reference when calculating the gain and directional characteristics of a real antenna.

Isotropic antennas radiate uniformly in all directions. In other words, when placed at the centre of a sphere such an antenna would illuminate the internal surface of the sphere uniformly as shown in Figure 2.2(a). All practical antennas have directional characteristics as illustrated in Figure 2.2(b). Furthermore, such characteristics may be more or less pronounced according to the antenna's application. We shall look at antenna gain and directivity in more detail later on but before we do that we shall introduce you to some common types of antenna.

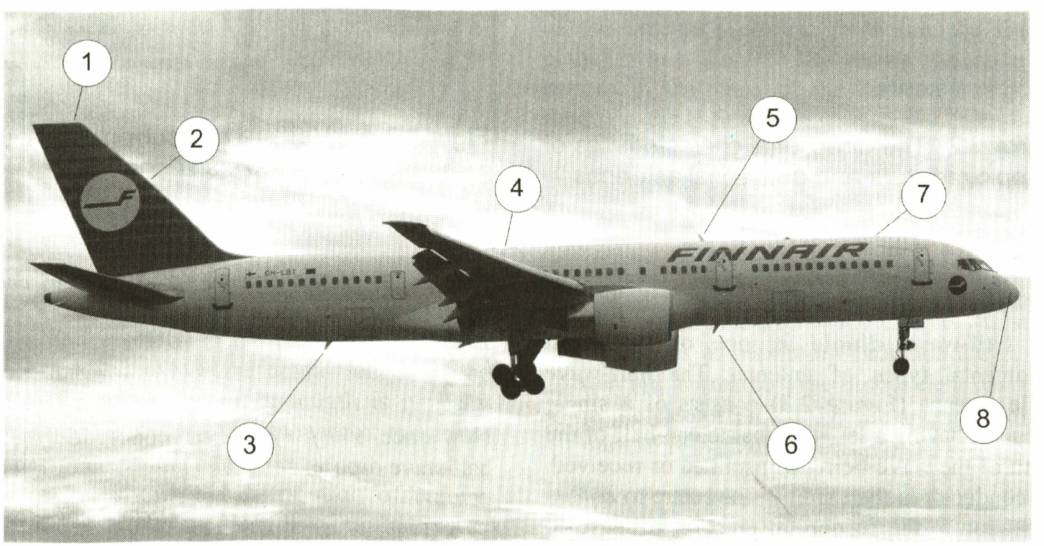

Figure 2.1 Some of the antennas fitted to a Boeing 757 aircraft. 1, VOR; 2, HF comms.; 3, 5 and 6, VHF comms.; 4, ADF; 7, TCAS (upper); 8, weather radar

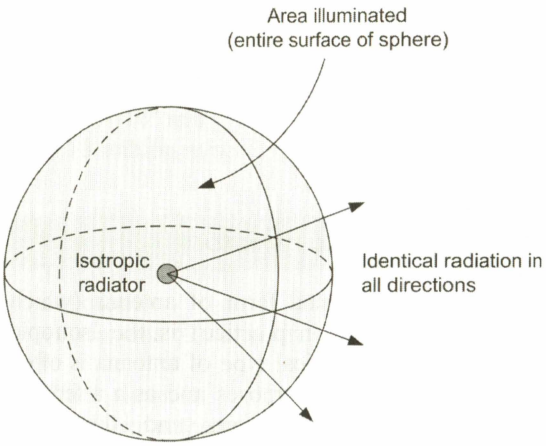

(a) Isotropic radiator

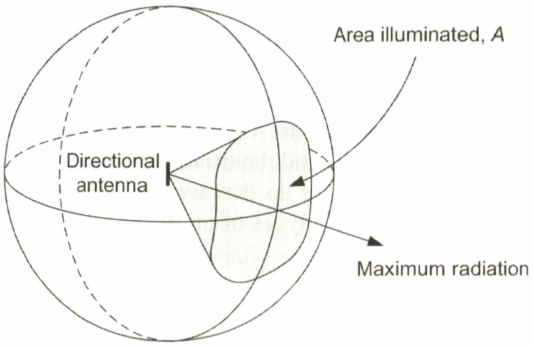

(b) Directional antenna

Figure 2.2 The directional characteristics of isotropic radiators and directional antennas

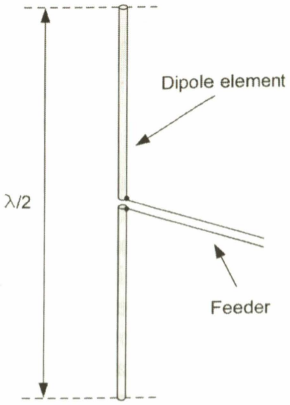

Figure 2.3 A half-wave dipole antenna

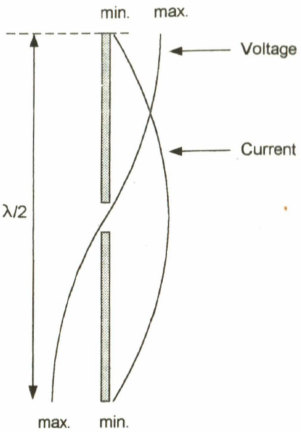

Figure 2.4 Voltage and current distribution in the half-wave dipole antenna

2.2 The half-wave dipole

The **half-wave dipole** is one of the most fundamental types of antenna. The half-wave dipole antenna (Figure 2.3) consists of a single conductor having a length equal to one-half of the length of the wave being transmitted or received. The conductor is then split in the centre to enable connection to the feeder. In practice, because of the capacitance effects between the ends of the antenna and ground, the antenna is cut a little shorter than a half wavelength.

The length of the antenna (from end to end) is equal to one half wavelength, hence:

$$l = \frac{\lambda}{2}$$

Now since $v = f \times \lambda$ we can conclude that, for a half-wave dipole:

$$l = \frac{v}{2f}$$

Note that l is the **electrical length** of the antenna rather than its actual **physical length**. End effects,

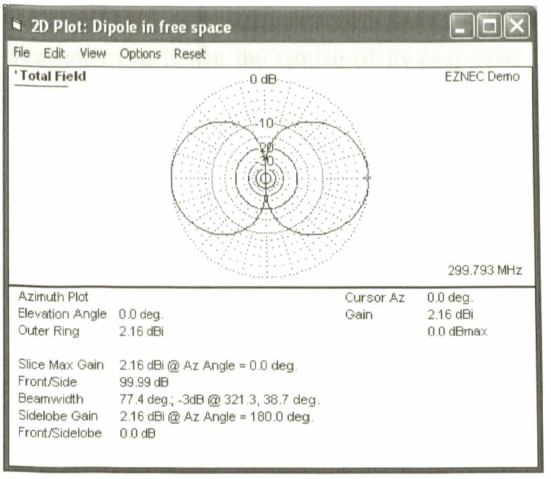

Figure 2.5 E-field polar radiation pattern for a half-wave dipole

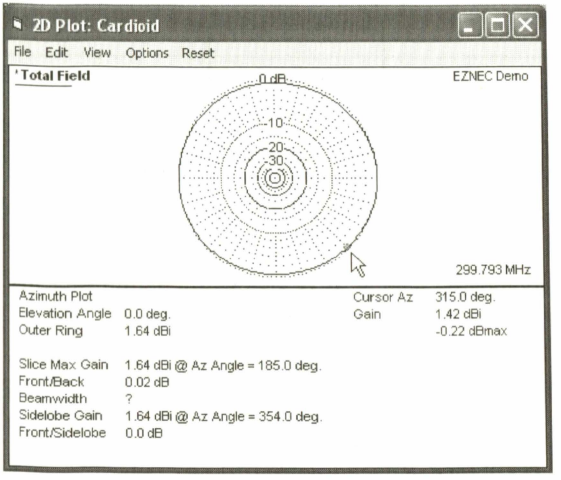

Figure 2.6 H-field polar radiation pattern for a half-wave dipole

or capacitance effects at the ends of the antenna require that we reduce the actual length of the aerial and a 5% reduction in length is typically required for an aerial to be resonant at the centre of its designed tuning range.

Figure 2.4 shows the distribution of current and voltage along the length of a half-wave dipole aerial. The current is maximum at the centre and zero at the ends. The voltage is zero at the centre and maximum at the ends. This

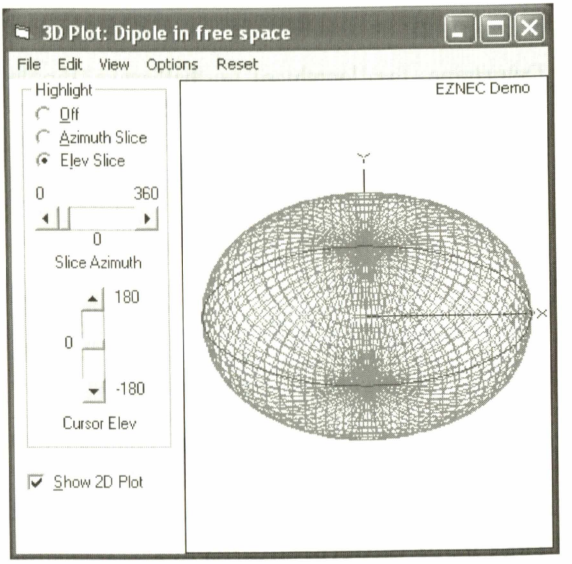

Figure 2.7 3D polar radiation pattern for a half-wave dipole (note the 'doughnut' shape)

implies that the impedance is not constant along the length of aerial but varies from a maximum at the ends (maximum voltage, minimum current) to a minimum at the centre.

The dipole antenna has directional properties illustrated in Figures 2.5 to 2.7. Figure 2.5 shows the radiation pattern of the antenna in the plane of the antenna's electric field (i.e. the E-field plane) whilst Figure 2.6 shows the radiation pattern in the plane of the antenna's magnetic field (i.e. the H-field plane).

The 3D plot shown in Figure 2.7 combines these two plots into a single 'doughnut' shape. Things to note from these three diagrams are that:

- in the case of Figure 2.5 minimum radiation occurs along the axis of the antenna whilst the two zones of maximum radiation are at 90° (i.e. are 'normal to') the dipole elements
- in the case of Figure 2.6 the antenna radiates uniformly in all directions.

Hence, a vertical dipole will have **omni-directional** characteristics whilst a horizontal dipole will have a **bi-directional** radiation pattern. This is an important point as we shall see later.

Example 2.1

Determine the length of a half-wave dipole antenna for use at a frequency of 150 MHz.

The length of a half-wave dipole for 150 MHz can be determined from:

$$l = \frac{v}{2f}$$

where $v = 3 \times 10^8$ m/s and $f = 150 \times 10^6$ Hz.

Hence:

$$l = \frac{v}{2f} = \frac{3\times10^8}{2\times150\times10^6} = \frac{3\times10^8}{300\times10^6} = \frac{3\times10^6}{3\times10^6} = 1 \text{ m}$$

Test your understanding 2.1

Determine the length of a half-wave dipole for frequencies of (a) 121 MHz and (b) 11.25 MHz.

2.3 Impedance and radiation resistance

Because voltage and current appear in an antenna (a minute voltage and current in the case of a receiving antenna and a much larger voltage and current in the case of a transmitting antenna) an aerial is said to have **impedance**. Here it's worth remembering that impedance is a mixture of resistance, R, and reactance, X, both measured in ohms (Ω). Of these two quantities, X varies with frequency whilst R remains constant. This is an important concept because it explains why antennas are often designed for operation over a restricted range of frequencies.

The impedance, Z, of an aerial is the ratio of the voltage, E, across its terminals to the current, I, flowing in it. Hence:

$$Z = \frac{E}{I} \ \Omega$$

You might infer from Figure 2.7 that the impedance at the centre of the half-wave dipole should be zero. In practice the impedance is usually between 70 Ω and 75 Ω. Furthermore, at resonance the impedance is purely resistive and contains no reactive component (i.e. inductance

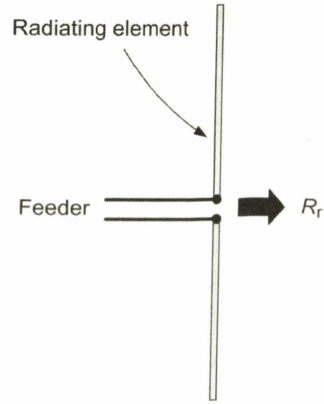

Figure 2.8 Radiation resistance

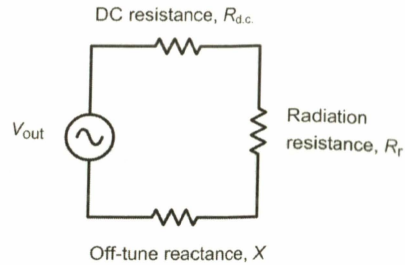

Figure 2.9 Equivalent circuit of an antenna

and capacitance). In this case X is negligible compared with R. It is also worth noting that the DC resistance (or **ohmic resistance**) of an antenna is usually very small in comparison with its impedance and so it may be ignored. Ignoring the DC resistance of the antenna, the impedance of an antenna may be regarded as its **radiation resistance**, R_r (see Figure 2.8).

Radiation resistance is important because it is through this resistance that electrical power is transformed into radiated electromagnetic energy (in the case of a transmitting antenna) and incident electromagnetic energy is transformed into electrical power (in the case of a receiving aerial).

The equivalent circuit of an antenna is shown in Figure 2.9. The three series-connected components that make up the antenna's impedance are:

- the DC resistance, $R_{d.c.}$
- the radiation resistance, R_r
- the 'off-tune' reactance, X.

Note that when the antenna is operated at a frequency that lies in the centre of its pass-band (i.e. when it is *on-tune*) the off-tune reactance is zero. It is also worth bearing in mind that the radiation resistance of a half-wave dipole varies according to its height above ground. The 70 Ω to 75 Ω impedance normally associated with a half-wave dipole is only realized when the antenna is mounted at an elevation of 0.2 wavelengths, or more.

Test your understanding 2.2

A half-wave dipole is operated at its centre frequency (zero off-tune reactance). If the antenna has a total DC loss resistance of 2.5 Ω and is supplied with a current of 2 A and a voltage of 25 V, determine:

(a) the radiation resistance of the antenna
(b) the power loss in the antenna.

2.4 Radiated power and efficiency

In the case of a transmitting antenna, the radiated power, P_r, produced by the antenna is given by:

$$P_r = I_a^2 \times R_r \quad \text{W}$$

where I_a is the antenna current, in amperes, and R_r is the radiation resistance in ohms. In most practical applications it is important to ensure that P_r is maximised and this is achieved by ensuring that R_r is much larger than the DC resistance of the antenna elements.

The efficiency of an antenna is given by the relationship:

$$\text{Radiation efficiency} = \frac{P_r}{P_r + P_{loss}} \times 100\%$$

Where P_{loss} is the power dissipated in the DC resistance present. At this point it is worth stating that whilst efficiency is vitally important in the case of a transmitting antenna it is generally unimportant in the case of a receiving antenna. This explains why a random length of wire can make a good receiving aerial but not a good transmitting antenna!

Example 2.2

An HF transmitting antenna has a radiation resistance of 12 Ω. If a current of 0.5 A is supplied to it, determine the radiated power.

Now:

$$P_r = I_a^2 \times R_r = (0.5)^2 \times 12 = 0.25 \times 12 = 4 \text{ W}$$

Example 2.3

If the aerial in Example 2.2 has a DC resistance of 2 Ω, determine the power loss and the radiation efficiency of the antenna.

From the equivalent circuit shown in Figure 2.9, the same current flows in the DC resistance, $R_{d.c.}$, as flows in the antenna's radiation resistance, R_r.

Hence $I_a = 0.5$ A and $R_{d.c.} = 2$ W

Since $P_{loss} = I_a^2 \times R_{d.c.}$

$$P_{loss} = (0.5)^2 \times 2 = 0.25 \times 2 = 0.5 \text{ W}$$

The radiation efficiency is given by:

$$\text{Radiation efficiency} = \frac{P_r}{P_r + P_{loss}} \times 100\%$$

$$= \frac{4}{4+0.5} \times 100\% = \frac{4}{4.5} \times 100\% = 89\%$$

In this example, more than 10% of the power output is actually wasted! It is also worth noting that in order to ensure a high value of radiation efficiency, the loss resistance must be kept very low in comparison with the radiation resistance.

2.5 Antenna gain

The field strength produced by an antenna is proportional to the amount of current flowing in it. However, since different types of antenna produce different values of field strength for the same applied RF power level, we attribute a power gain to the antenna. This power gain is specified in relation to a **reference antenna** (often either a half-wave dipole or a theoretical isotropic radiator) and it is usually specified in decibels (dB)—see Appendix 2.

In order to distinguish between the two types of reference antenna we use subscripts **i** and **d** to denote isotropic and half-wave dipole reference antennas respectively. As an example, an aerial having a gain of 10 dB_i produces ten times power gain when compared with a theoretical isotropic radiator. Similarly, an antenna having a gain of 13 dB_d produces twenty times power gain when compared with a half-wave dipole. Putting this another way, to maintain the same field strength at a given point, you would have to apply 20 W to a half-wave dipole or just 1 W to the antenna in question! Some comparative values of antenna gain are shown on page 28.

2.6 The Yagi beam antenna

Originally invented by two Japanese engineers, Yagi and Uda, the Yagi antenna has remained extremely popular in a wide variety of applications and, in particular, for fixed domestic FM radio and TV receiving aerials. In order to explain in simple terms how the Yagi antenna works we shall use a simple light analogy.

An ordinary filament lamp radiates light in all directions. Just like an antenna, the lamp converts electrical energy into electromagnetic energy. The only real difference is that we can *see* the energy that it produces!

The action of the filament lamp is comparable with our fundamental dipole antenna. In the case of the dipole, electromagnetic radiation will occur all around the dipole elements (in three dimensions the radiation pattern will take on a doughnut shape). In the plane that we have shown in Figure 2.10(c), the directional pattern will be a figure-of-eight that has two lobes of equal size. In order to concentrate the radiation into just one of the radiation lobes we could simply place a reflecting mirror on one side of the filament lamp. The radiation will be reflected (during which the reflected light will undergo a 180° phase change) and this will reinforce the light on one side of the filament lamp. In order to achieve the same effect in our antenna system we need to place a conducting element about one quarter of a wavelength behind the dipole element. This element is referred to as a **reflector** and it is said to be 'parasitic' (i.e. it is not actually connected to

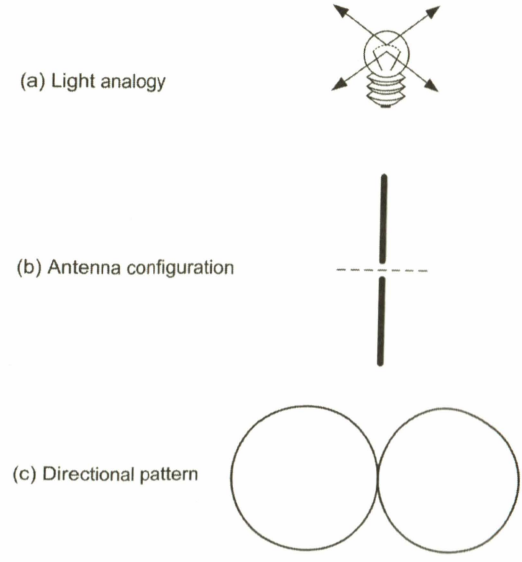

Figure 2.10 Dipole antenna light analogy

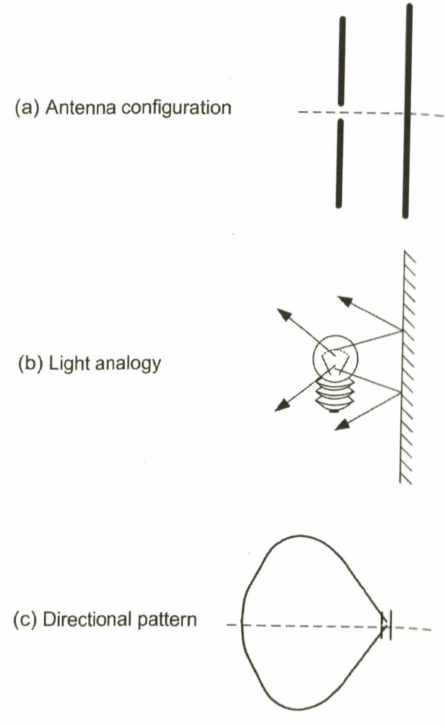

Figure 2.11 Light analogy for a dipole and reflector

the feeder). The reflector needs to be cut slightly longer than the driven dipole element. The resulting directional pattern will now only have one **major lobe** because the energy radiated will be concentrated into just one half of the figure-of-eight pattern that we started with).

Continuing with our optical analogy, in order to further concentrate the light energy into a narrow beam we can add a lens in front of the lamp. This will have the effect of bending the light emerging from the lamp towards the normal line (see Figure 2.12). In order to achieve the same effect in our antenna system we need to place a conducting element, known as a **director**, on the other side of the dipole and about one quarter of a wavelength from it. Once again, this element is parasitic but in this case it needs to be cut slightly shorter than the driven dipole element. The resulting directional pattern will now have a narrower major lobe as the energy becomes concentrated in the normal direction (i.e. at right angles to the dipole elements). The resulting antenna is known as a three-element Yagi aerial, see Figure 2.13.

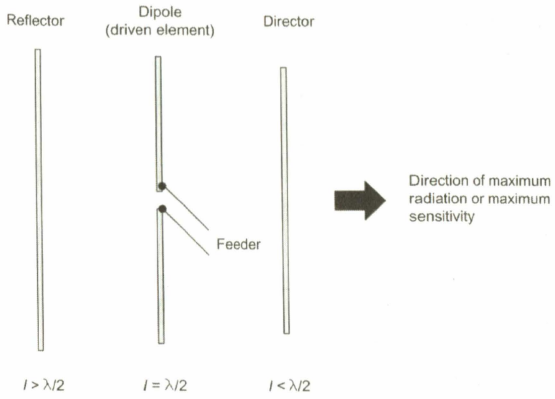

Figure 2.13 A three-element Yagi antenna

If desired, additional directors can be added to further increase the gain and reduce the **beamwidth** (i.e. the angle between the half-power or –3 dB power points on the polar characteristic) of Yagi aerials. Some comparative gain and beamwidth figures are shown on page 28.

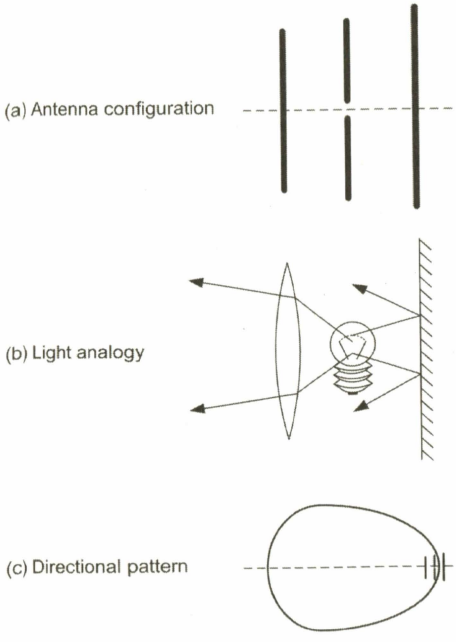

Figure 2.12 Light analogy for a dipole, reflector and director

Figure 2.14 A four-element Yagi antenna (note how the dipole element has been 'folded' in order to increase its impedance and provide a better match to the 50 Ω feeder system)

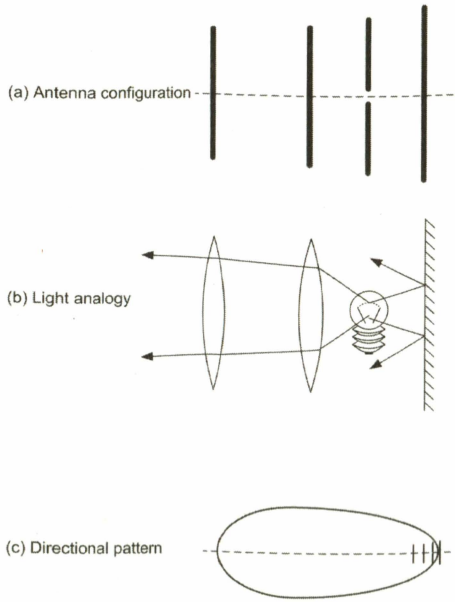

Figure 2.15 Light analogy for the four-element Yagi shown in Figure 2.14

2.7 Directional characteristics

Antenna gain is achieved at the expense of directional response. In other words, as the gain of an antenna increases its radiation pattern becomes more confined. In many cases this is a desirable effect (e.g. in the case of fixed point–point communications). In other cases (e.g. a base station for use with a number of mobile stations) it is clearly undesirable.

The directional characteristics of an antenna are usually presented in the form of a polar response graph. This diagram allows users to determine directions in which maximum and minimum gain can be achieved and allows the antenna to be positioned for optimum effect.

The polar diagram for a horizontal dipole is shown in Figure 2.16. Note that there are two major lobes in the response and two deep nulls. The antenna is thus said to be bi-directional.

Figure 2.17 shows the polar diagram for a dipole plus reflector. The radiation from this antenna is concentrated into a single major lobe and there is a single null in the response at 180° to the direction of maximum radiation.

An alternative to improving the gain but maintaining a reasonably wide beamwidth is that of stacking two antennas one above another (see Figure 2.20). Such an arrangement will usually provide a 3 dB gain over a single antenna but will have the same beamwidth. A disadvantage of stacked arrangements is that they require accurate phasing and matching arrangements.

As a rule of thumb, an increase in gain of 3 dB can be produced each time the number of elements is doubled. Thus a two-element antenna will offer a gain of about 3 dBd, a four-element antenna will produce 6 dBd, an eight-element Yagi will realise 9 dBd, and so on.

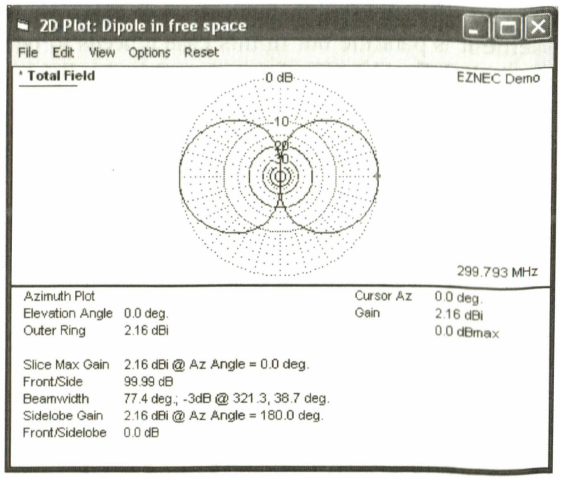

Figure 2.16 Polar plot for a horizontal dipole

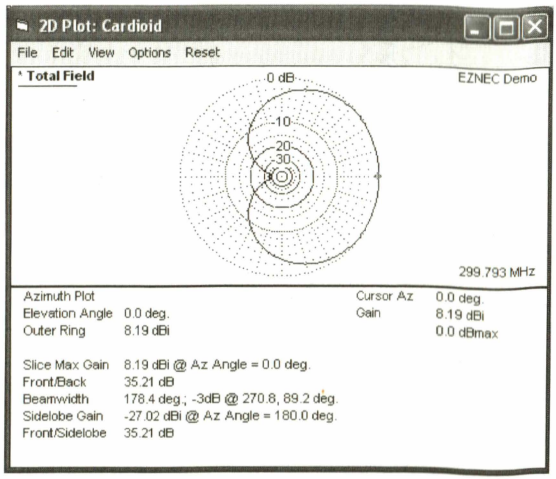

Figure 2.17 Polar plot for a two-element Yagi

Test your understanding 2.3

Identify the antenna shown in Figure 2.19. Sketch a typical horizontal radiation pattern for this antenna.

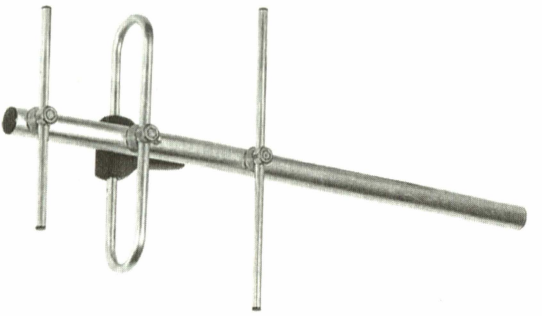

Figure 2.19 See Test your understanding 2.3

Test your understanding 2.4

Identify the antenna shown in Figure 2.20. Sketch a typical horizontal radiation pattern for this antenna.

Test your understanding 2.5

Figure 2.18 shows the polar response of a Yagi beam antenna (the gain has been specified relative to a standard reference dipole). Use the polar plot to determine:

(a) the gain of the antenna
(b) the beamwidth of the antenna
(c) the size and position of any 'side lobes'
(d) the 'front-to-back' ratio (i.e. the size of the major lobe in comparison to the response of the antenna at 180° to it).

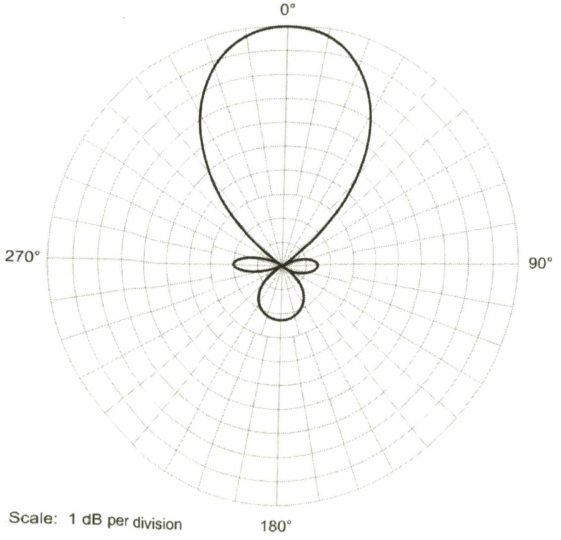

Figure 2.18 Polar diagram for a Yagi beam antenna (see Test your understanding 2.5)

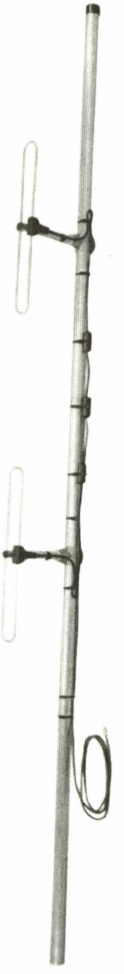

Figure 2.20 See Test your understanding 2.4

2.8 Other practical antennas

Many practical forms of antenna are used in aircraft and aviation-related applications. The following are some of the most common types (several other antennas will be introduced in later chapters).

2.8.1 Vertical quarter-wave antennas

One of the most simple antennas to construct is the quarter-wave antenna (also known as a **Marconi antenna**). Such antennas produce an omnidirectional radiation pattern in the horizontal plane and radiate vertically polarised signals. Practical quarter-wave antennas can be produced for the high-HF and VHF bands but their length is prohibitive for use on the low-HF and LF bands.

In order to produce a reasonably flat radiation pattern (and prevent maximum radiation being directed upwards into space) it is essential to incorporate an effective ground plane. At VHF, this can be achieved using just four quarter-wave radial elements at 90° to the vertical radiating element (see Figure 2.21). All four radials are grounded at the feed-point to the outer screen of the coaxial feeder cable.

A slight improvement on the arrangement in Figure 2.21 can be achieved by sloping the radial elements at about 45° (see Figure 2.22). This arrangement produces a flatter radiation pattern.

At HF rather than VHF, the ground plane can be the earth itself. However, to reduce the earth resistance and increase the efficiency of the antenna, it is usually necessary to incorporate some buried earth radials (see Figure 2.23). These radial wires simply consist of quarter-wave lengths of insulated stranded copper wire grounded to the outer screen of the coaxial feeder at the antenna feed point.

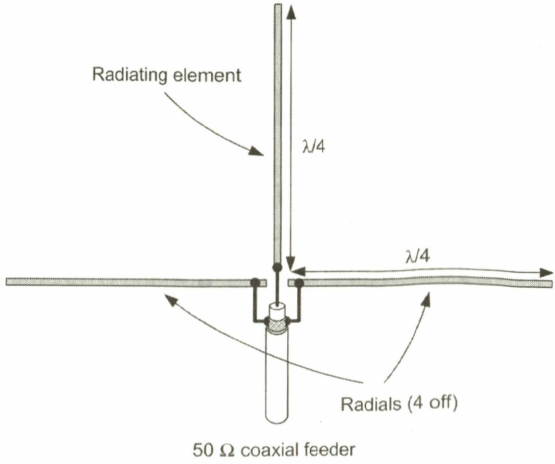

Figure 2.21 Quarter wave vertical antenna

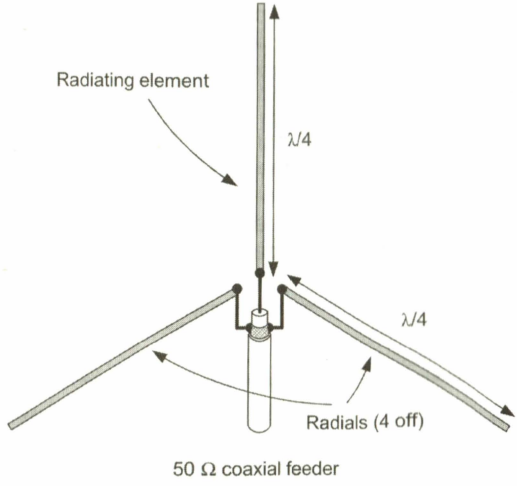

Figure 2.22 Quarter wave vertical antenna with sloping radials

2.8.2 Vertical half-wave antennas

An alternative to the use of a quarter-wave radiating element is that of a half-wave element. This type of antenna must be *voltage fed* (rather than *current fed* as is the case with the quarter-wave antenna). A voltage-fed antenna requires the use of a resonant transformer connected between the low-impedance coaxial feeder and the end of the antenna. Such an arrangement is prone to losses since it requires high-quality, low-loss components. It may also require careful adjustment for optimum results and thus a quarter-wave or three-quarter wave antenna is usually preferred.

2.8.3 5/8th wave vertical antennas

5/8th wave vertical antennas provide a compact solution to the need for an omnidirectional VHF/

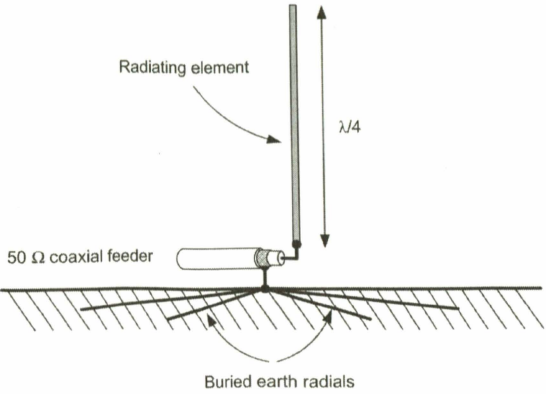

Figure 2.23 Quarter–wave vertical antenna with sloping radials

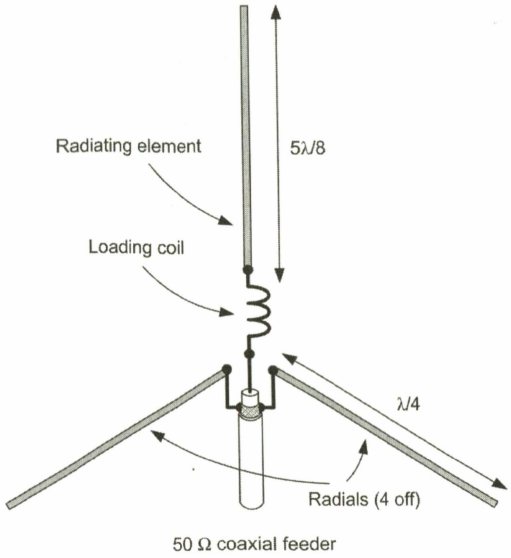

Figure 2.24 5/8th wave vertical antenna with sloping radials

UHF antenna offering some gain over a basic quarter-wave antenna. In fact, a 5/8th wave vertical antenna behaves electrically as a three-quarter wave antenna (i.e. it is current fed from the bottom and there is a voltage maximum at the top). In order to match the antenna, an inductive loading coil is incorporated at the feed-point. A typical 5/8th wave vertical antenna with sloping ground plane is shown in Figure 2.24.

2.8.4 Corner reflectors

An alternative to the Yagi antenna (described earlier) is that of a corner reflecting arrangement like that shown in Figure 2.25. The two reflecting surfaces (which may be solid or perforated to reduce wind resistance) are inclined at an angle of about 90°. This type of aerial is compact in comparison with a Yagi and also relatively unobtrusive.

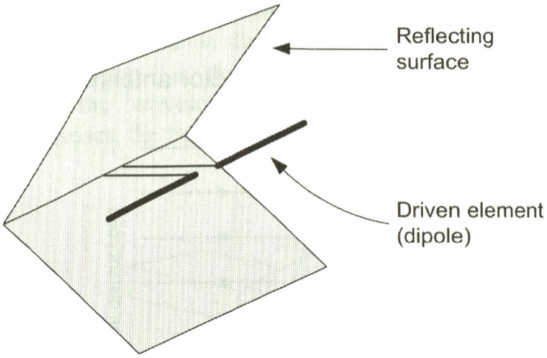

Figure 2.25 High-gain corner reflector antenna with dipole feed

2.8.5 Parabolic reflectors

The need for very high gain coupled with directional response at UHF or microwave frequencies is often satisfied by the use of a parabolic reflector in conjunction with a radiating element positioned at the feed-point of the dish (see Figure 2.26). In order to be efficient, the diameter of a parabolic reflecting surface must be large in comparison with the wavelength of the signal. The gain of such an antenna depends on various factors but is directly proportional to the ratio of diameter to wavelength.

The principle of the parabolic reflector antenna is shown in Figure 2.27. Signals arriving from a distant transmitter will be reflected so that they pass through the focal point of the parabolic surface (as shown). With a conventional parabolic surface, the focal point lies directly on the axis directly in front of the reflecting surface. Placing a radiating element (together with its supporting structure) at the focal point may thus have the

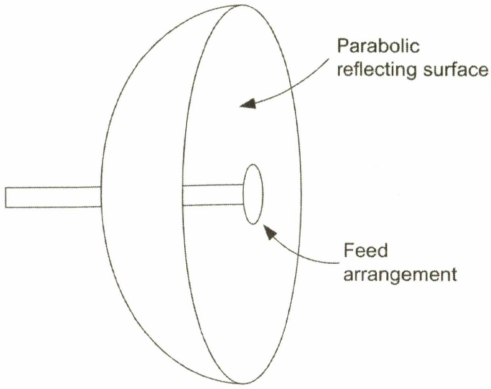

Figure 2.26 Parabolic reflector antenna

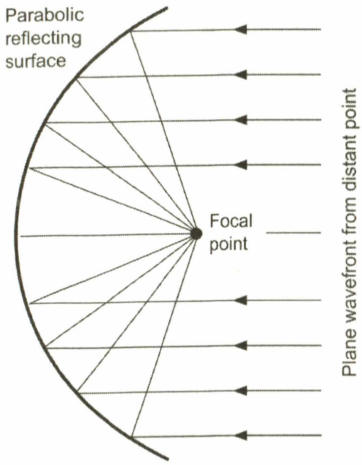

Figure 2.27 Principle of the parabolic reflector

undesirable effect of partially obscuring the parabolic surface! In order to overcome this problem the surface may be modified so that the focus is offset from the central axis.

It is important to realise that the reflecting surface of a parabolic reflector antenna is only part of the story. Equally important (and crucial to the effectiveness of the antenna) is the method of feeding the parabolic surface. What's required here is a means of illuminating or capturing signals from the entire parabolic surface.

Figure 2.28 shows a typical feed arrangement based on a waveguide (see page 38), half-wave dipole and a reflector. The dipole and reflector has a beamwidth of around 90° and this is ideal for illuminating the parabolic surface. The dipole and reflector is placed at the focal point of the dish. This feed arrangement is often used for **focal plane reflector** antennas where the outer edge of the dish is in the same plane as the half-wave dipole plus reflector feed.

An alternative arrangement using a waveguide and small horn radiator (see page 27) is shown in Figure 2.29. The horn aerial offers some modest gain (usually 6 to 10 dB, or so) and this can be instrumental in increasing the overall gain of the arrangement. Such antennas are generally not focal plane types and the horn feed will usually require support above the parabolic surface.

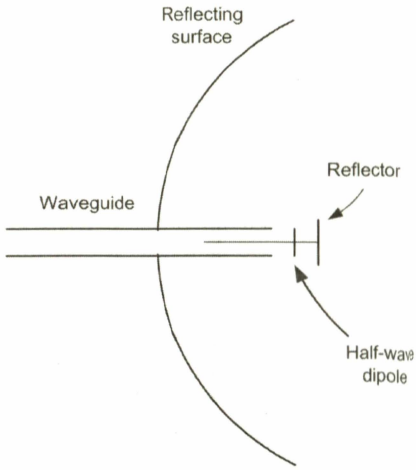

Figure 2.28 Parabolic reflector with half-wave dipole and reflector feed

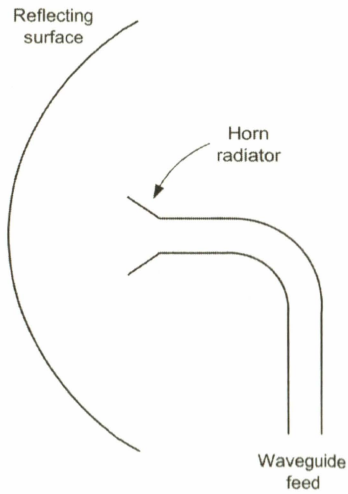

Figure 2.29 Parabolic reflector with horn and waveguide

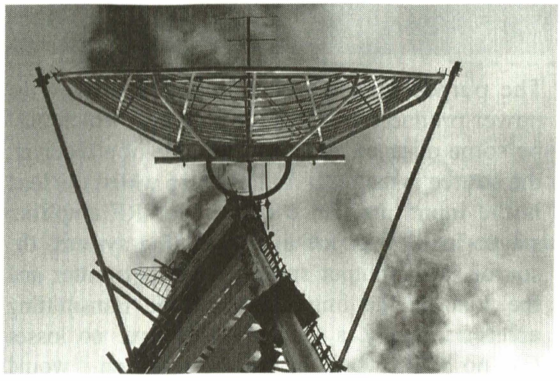

Figure 2.30 Parabolic reflector antenna with dipole and reflector feed

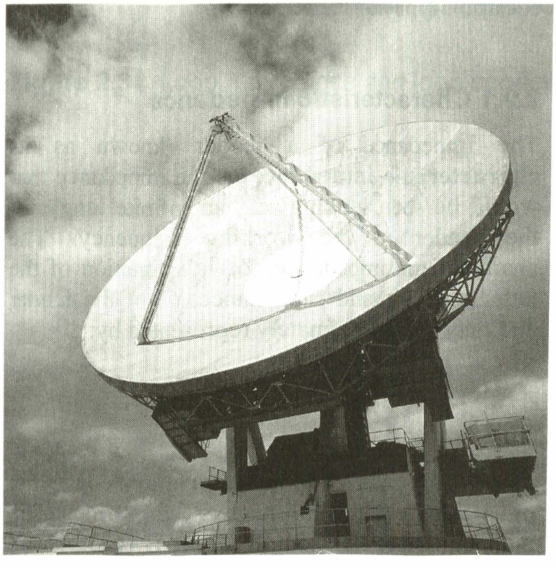

Figure 2.31 High-gain earth station antenna with parabolic reflector and horn feed

Test your understanding 2.6

Identify an antenna type suitable for use in the following applications. Give reasons for your answers:

(a) an SHF satellite earth station
(b) a low-frequency non-directional beacon
(c) an airfield communication system
(d) a long-range HF communication system
(e) a microwave link between two fixed points.

2.8.6 Horn antennas

Like parabolic reflector antennas, horn antennas are commonly used at microwave frequencies. Horn aerials may be used alone or as a means of illuminating a parabolic (or other) reflecting surface. Horn antennas are ideal for use with waveguide feeds; the transition from waveguide (see page 38) to the free space aperture being accomplished over several wavelengths as the waveguide is gradually flared out in both planes. During the transition from waveguide to free space, the impedance changes gradually. The gain of a horn aerial is directly related to the ratio of its aperture (i.e. the size of the horn's opening) and the wavelength. However, as the gain increases, the beamwidth becomes reduced.

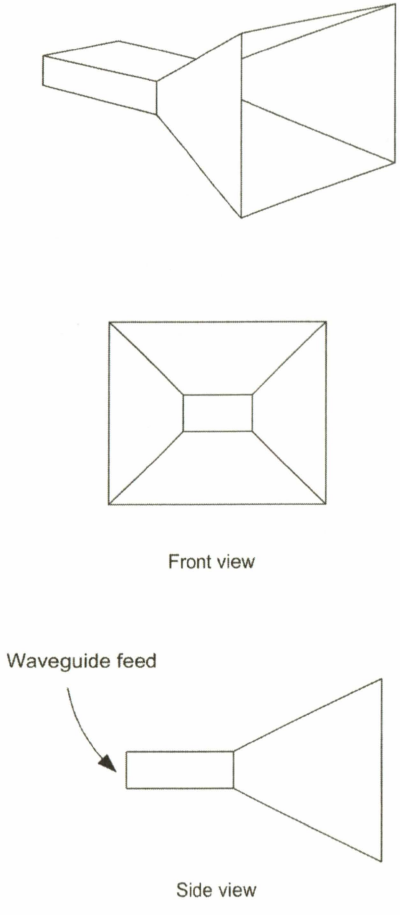

Figure 2.32 A horn antenna

Table 2.1 Typical characteristics of some common antennas

Application	*Gain (dB_d)*	*Beamwidth (degrees)*
Vertical half-wave dipole	0	360
Vertical quarter-wave with ground plane	0	360
Four-element Yagi	6	43
UHF corner reflector	9	27
Two stacked vertical half-wave dipoles	3	360
5/8th wave vertical with ground plane	2	360
Small horn antenna for use at 10 GHz	10	20
3 m diameter parabolic antenna for tracking space vehicles at UHF	40	4

Test your understanding 2.7

Identify the antenna shown in Figure 2.33. Sketch a typical horizontal radiation pattern for this antenna.

Figure 2.33 See Test your understanding 2.7

2.9 Feeders

The purpose of the feeder line is to convey the power produced by a source to a load which may be some distance away. In the case of a receiver, the source is the receiving antenna whilst the load is the input impedance of the first RF amplifier stage. In the case of a transmitting system, the source is the output stage of the transmitter and the load is the impedance of the transmitting antenna. Ideally, a feeder would have no losses (i.e. no power would be wasted in it) and it would present a perfect match between the impedance of the source to that of the load. In practice, this is seldom the case. This section explains the basic principles and describes the construction of most common types of feeder.

2.9.1 Characteristic impedance

The impedance of a feeder (known as its **characteristic impedance**) is the impedance that would be seen looking into an infinite length of the feeder at the working frequency. The characteristic impedance, Z_0, is a function of the inductance, L, and capacitance, C, of the feeder and may be approximately represented by:

$$Z_0 = \sqrt{\frac{L}{C}}\ \Omega$$

L and C are referred to as the **primary constants** of a feeder. In this respect, L is the loop inductance per unit length whilst C is the shunt capacitance per unit length (see Figure 2.34).

In practice, a small amount of DC resistance will be present in the feeder but this is usually negligible. For the twin open wire shown in Figure 2.21(a), the inductance, L, and capacitance, C, of the line depend on the spacing between the wires and the diameter of the two conductors. For the coaxial cable shown in Figure 2.21(b) the characteristic impedance depends upon the ratio of the diameters of the inner and outer conductors.

Example 2.4

A cable has a loop inductance of 20 nH and a capacitance of 100 pF. Determine the characteristic impedance of the cable.

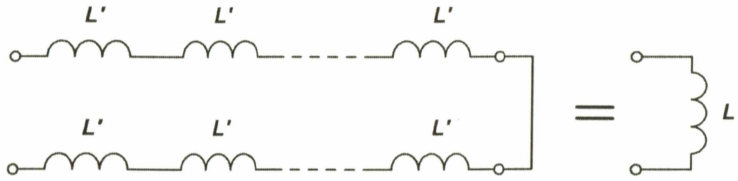

(a) Loop inductance (line short-circuit at the far end)

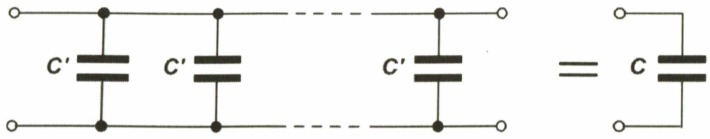

(b) Loop capacitance (line open-circuit at the far end)

Figure 2.34 Loop inductance and loop capacitance

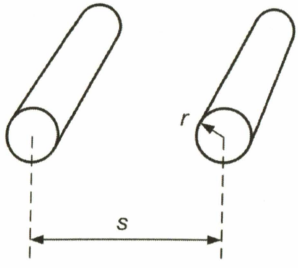

(a) Open wire feeder

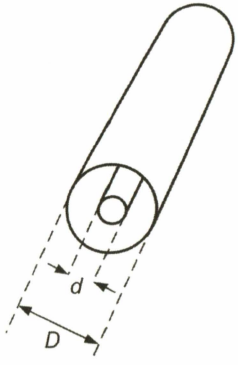

(b) Coaxial cable

Figure 2.35 Dimensions of flat twin feeder and coaxial cables

In this case, $L = 20$ nH $= 20 \times 10^{-9}$ H and $C = 100$ pF $= 100 \times 10^{-12}$ F.

Using $Z_0 = \sqrt{\frac{L}{C}}\ \Omega$ gives:

$$Z_0 = \sqrt{\frac{180 \times 10^{-9}}{100 \times 10^{-12}}} = \sqrt{1.8 \times 10^3} = \sqrt{1800} = 42\ \Omega$$

2.9.2 Coaxial cables

Because they are screened, coaxial cables are used almost exclusively in aircraft applications. The coaxial cable shown in Figure 2.35(b) has a centre conductor (either solid or stranded wire) and an outer conductor that completely shields the inner conductor. The two conductors are concentric and separated by an insulating dielectric that is usually air or some form of polythene. The impedance of such a cable is given by:

$$Z_0 = 138 \log_{10}\left(\frac{D}{d}\right)\ \Omega$$

where Z_0 is the characteristic impedance (in ohms), D is the inside diameter of the outside

conductor (in mm), and d is the outside diameter of the inside conductor (in mm).

Example 2.5

A coaxial cable has an inside conductor diameter of 2 mm and an outside conductor diameter of 10 mm. Determine the characteristic impedance of the cable.

In this case, $d = 2$ mm and $D = 10$ mm.

Using $Z_0 = 138\log_{10}\left(\frac{D}{d}\right)\ \Omega$ gives:

$$Z_0 = 138\log_{10}\left(\frac{10}{2}\right) = 138\log_{10}(5) = 138\times 0.7 = 97\ \Omega$$

2.9.3 Two-wire open feeder

The characteristic impedance of the two-wire open feeder shown in Figure 2.35(a) is given by:

$$Z_0 = 276\log_{10}\left(\frac{s}{r}\right)\ \Omega$$

where Z_0 is the characteristic impedance (in ohms), s is the spacing between the wire centres (in mm), and r is the radius of the wire (in mm).

Flat twin **ribbon cable** is a close relative of the two-wire open line (the difference between these two being simply that the former is insulated and the two conductors are separated by a rib of the same insulating material).

When determining the characteristic impedance of ribbon feeder, the formula given above must be modified to allow for the dielectric constant of the insulating material. In practice, however, the difference may be quite small.

Test your understanding 2.8

1. A coaxial cable has an inductance of 30 nH/m and a capacitance of 120 pF/m. Determine the characteristic impedance of the cable.
2. The open wire feeder used with a high-power land-based HF radio transmitter uses wire having a diameter of 2.5 mm and a spacing of 15 mm. Determine the characteristic impedance of the feeder.

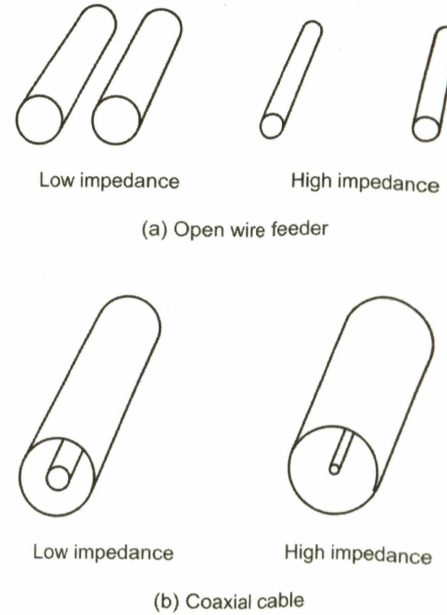

Figure 2.36 Effect of dimensions on the characteristic impedance of open wire feeder and coaxial cable

2.9.4 Attenuation

The attenuation of a feeder is directly proportional to the DC resistance of the feeder and inversely proportional to the impedance of the line. Obviously, the lower the resistance of the feeder, the smaller will be the power losses. The attenuation is given by:

$$A = 0.143\frac{R}{Z_0}\ \text{dB}$$

where A is the attenuation in dB (per metre), R is the resistance in ohms (per metre) and Z is the characteristic impedance (in ohms).

Whilst the attenuation of a feeder remains reasonably constant throughout its specified frequency range, it is usually subject to a progressive increase beyond the upper frequency limit (see Figure 2.38). It is important when choosing a feeder or cable for a particular application to ensure that the operating frequency is within that specified by the manufacturer. As an example, RG178B/U coaxial cable has a loss that increases with frequency from 0.18 dB at 10

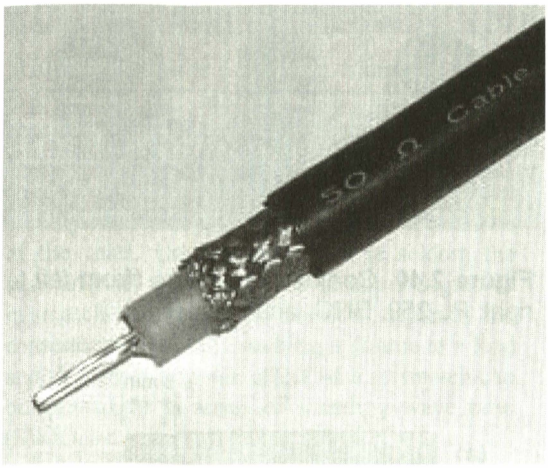

Figure 2.37 Construction of a high-quality coaxial cable (50 Ω impedance)

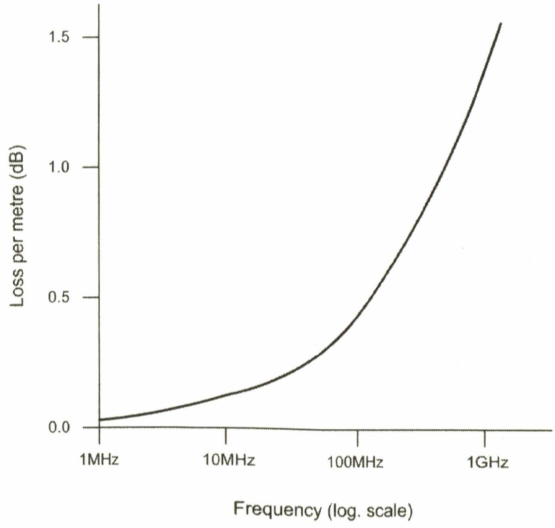

Figure 2.38 Attenuation of a typical coaxial cable feeder

MHz, to 0.44 dB at 100 MHz, 0.95 dB at 400 MHz, and 1.4 dB at 1 GHz.

2.9.5 Primary constants

The two types of feeder that we have already described differ in that one type (the coaxial feeder) is unbalanced whilst the other (the two-wire **transmission line**) is balanced. In order to fully understand the behaviour of a feeder, whether balanced or unbalanced, it is necessary to consider its equivalent circuit in terms of four conventional component values; resistance, inductance, capacitance and conductance, as shown in Figure 2.39. These four parameters are known as primary constants and they are summarised in Table 2.2.

Table 2.2 The primary constants of a feeder

Constant	*Symbol*	*Units*
Resistance	R	Ohms (Ω)
Inductance	L	Henries (H)
Capacitance	C	Farads (F)
Conductance	G	Siemens (S)

Note that, in a 'loss-free' feeder, R and G are both very small and can be ignored (i.e. $R = 0$ and $G = 0$) but with a real feeder both R and G are present.

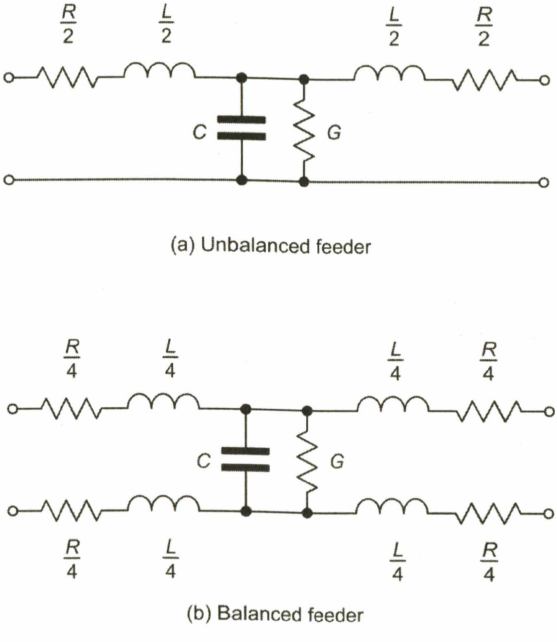

Figure 2.39 Equivalent circuit of balanced and unbalanced feeders

2.9.6 Velocity factor

The velocity of a wave in a feeder is not the same as the velocity of the wave in free space. The ratio of the two (velocity in the feeder compared with the velocity in free space) is known as the **velocity factor**. Obviously, velocity factor must always be less than 1, and in typical feeders it varies from 0.6 to 0.97 (see Table 2.3).

Table 2.3 Velocity factor for various types of feeder

Type of feeder	*Velocity factor*
Two-wire open line (wire with air dielectric)	0.975
Parallel tubing (air dielectric)	0.95
Coaxial line (air dielectric)	0.85
Coaxial line (solid plastic dielectric)	0.66
Two-wire line (wire with plastic dielectric)	0.68 to 0.82
Twisted-pair line (rubber dielectric)	0.56 to 0.65

2.10 Connectors

Connectors provide a means of linking coaxial cables to transmitting/receiving equipment and antennas. Connectors should be reliable, easy to mate, and sealed to prevent the ingress of moisture and other fluids. They should also be designed to minimise contact resistance and, ideally, they should exhibit a constant impedance which accurately matches that of the system in which they are used (normally 50 Ω for aircraft applications).

Coaxial connectors are available in various format (see Figure 2.40). Of these, the BNC- and N-type connectors are low-loss constant impedance types.

The need for constant impedance connectors (e.g. BNC and N-type connectors) rather than cheaper non-constant impedance connectors (e.g. PL-259) becomes increasingly critical as the

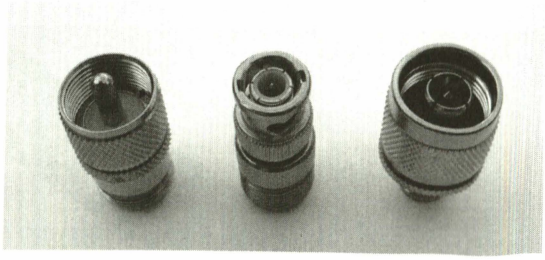

Figure 2.40 Coaxial connectors (from left to right: PL-259, BNC, and N-type)

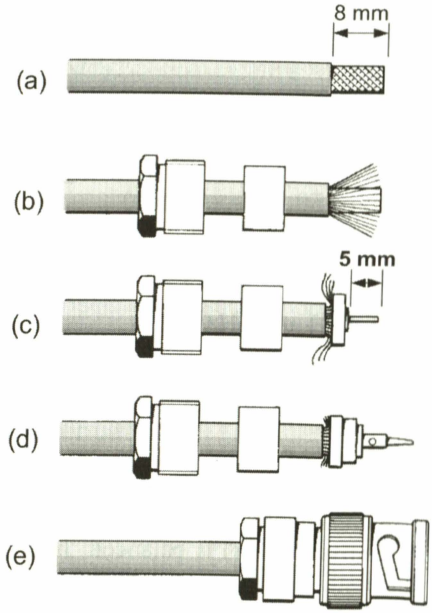

Figure 2.41 Method of fitting a BNC-type connector to a coaxial cable

impedance connectors should be used for applications at frequencies of above 200 MHz. Below this frequency, the loss associated with using non-constant impedance connectors is not usually significant.

Figure 2.41 shows the method of fitting a typical BNC connector to a coaxial cable. Fitting requires careful preparation of the coaxial cable. The outer braided screen is fanned out, as shown in Figure 2.41(b) and Figure 2.41(c) and clamped in place whereas the inner conductor is usually soldered to the centre contact, as shown in Figure 2.41(d).

2.11 Standing wave ratio

Matching a source (such as a transmitter) to a load (such as an aerial) is an important consideration because it allows the maximum transfer of power from one to the other. Ideally, a feeder should present a perfect match between the impedance of the source and the impedance of the load. Unfortunately this is seldom the case and all too often there is some degree of mismatch present. This section explains the consequences of mismatching a source to a load and describes how the effect of a mismatch can be quantified in terms of standing wave ratio (SWR).

Where the impedance of the transmission line or feeder perfectly matches that of the aerial, all of the energy delivered by the line will be transferred to the load (i.e. the aerial). Under these conditions, no energy will be reflected back to the source.

If the match between source and load is imperfect, a proportion of the energy arriving at the load will be reflected back to the source. The result of this is that a standing wave pattern of voltage and current will appear along the feeder (see Fig. 2.42).

The standing wave shown in Figure 2.42 occurs when the wave travelling from the source to the load (i.e. the **forward wave**) interacts with the wave travelling from the load to the source (the **reflected wave**). It is important to note that both the forward and reflected waves are moving but in opposite directions. The standing wave, on the other hand, is stationary.

As indicated in Figure 2.42 when a standing wave is present, at certain points along the feeder the voltage will be a maximum whilst at others it will take a minimum value. The current distribution along the feeder will have a similar pattern (note, however, that the voltage maxima will coincide with the current minima, and vice versa).

Four possible scenarios are shown in Figure 2.43. In Figure 2.43(a) the feeder is perfectly matched to the load. Only the forward wave is present and there is no standing wave. This is the ideal case in which all of the energy generated by the source is absorbed by the load.

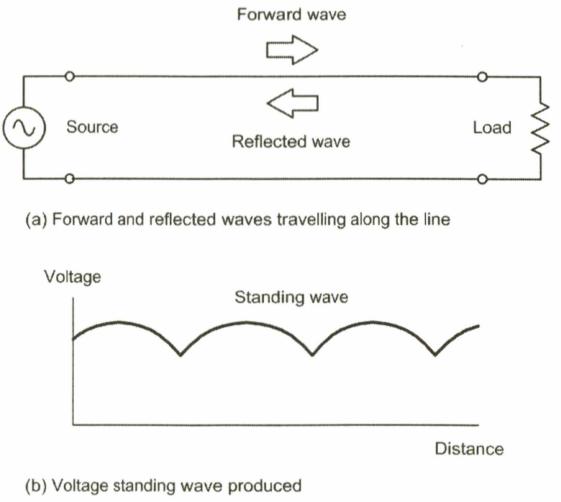

Figure 2.42 Forward and reflected waves when a load is mismatched

In Figure 2.43(b) the load is short-circuit. This represents one of the two worst-case scenarios as the voltage varies from zero to a very high positive value. In this condition, all of the generated power is reflected back to the source.

In Figure 2.43(c) the load is open-circuit. This represents the other worst-case scenario. Here again, the voltage varies from zero to a high positive value and, once again, all of the generated power is reflected back to the source.

In Figure 2.43(d) the feeder is terminated by an impedance that is different from the feeder's characteristic impedance but is neither a short-circuit nor an open-circuit. This condition lies somewhere between the extreme and perfectly matched cases.

The **standing wave ratio** (SWR) of a feeder or transmission line is an indicator of the effectiveness of the impedance match between the transmission line and the antenna. The SWR is the ratio of the maximum to the minimum current along the length of the transmission line, or the ratio of the maximum to the minimum voltage. When the line is absolutely matched the SWR is unity. In other words, we get unity SWR when there is no variation in voltage or current along the transmission line.

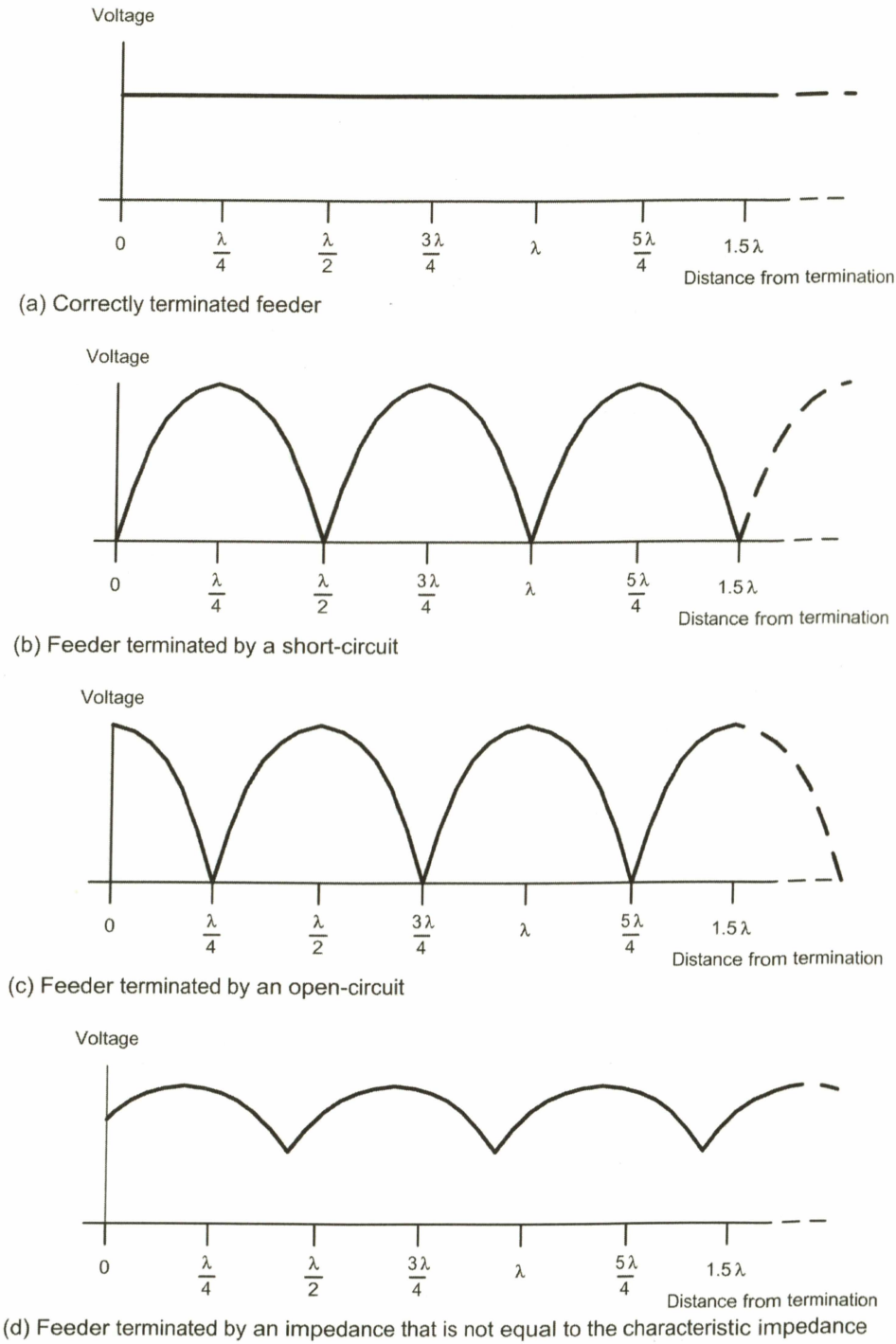

Figure 2.43 Effect of different types of mismatch

The greater the number representing SWR, the larger is the mismatch. Also, I^2R losses increase with increasing SWR.

For a *purely resistive* load:

$$\text{SWR} = \frac{Z_r}{Z_0} \quad (\text{when } Z_r > Z_0)$$

and

$$\text{SWR} = \frac{Z_0}{Z_r} \quad (\text{when } Z_r < Z_0)$$

where Z_0 is the characteristic impedance of the transmission line (in ohms) and Z_r is the impedance of the load (also in ohms). Note that, since SWR is a ratio, it has no units.

SWR is optimum (i.e. unity) when Z_r is equal to Z_0. It is unimportant as to which of these terms is in the numerator. Since SWR cannot be less than 1, it makes sense to put whichever is the larger of the two numbers in the numerator.

The average values of RF current and voltage become larger as the SWR increases. This, in turn, results in increased power loss in the series loss resistance and leakage conductance respectively.

For values of SWR of between 1 and 2 this additional feeder loss is not usually significant and is typically less than 0.5 dB. However, when the SWR exceeds 2.5 or 3, the additional loss becomes increasingly significant and steps should be taken to reduce it to a more acceptable value.

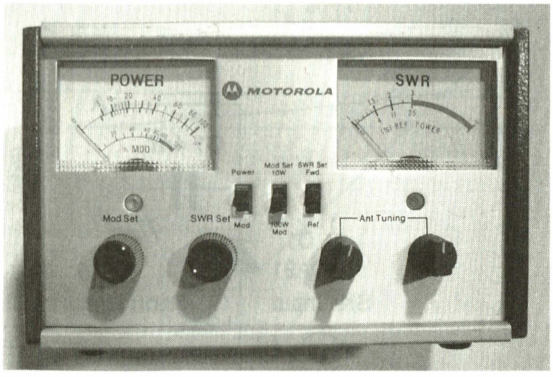

Figure 2.44 A combined RF power and SWR meter

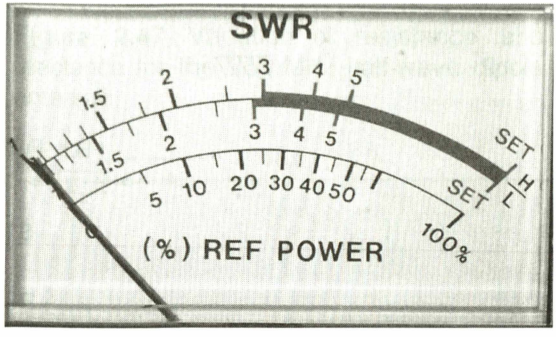

Figure 2.45 A typical SWR meter scale (showing SWR and % reflected power)

2.11.1 SWR measurement

Standing wave ratio is easily measured using an instrument known as an SWR bridge, SWR meter, or a combined SWR/power meter (see Figure 2.44). Despite the different forms of this instrument the operating principle involves sensing the forward and reflected power and displaying the difference between them.

Figure 2.45 shows the scale calibration for the SWR meter circuit shown in Figure 2.46. The instrument comprises a short length of transmission line with two inductively and capacitively coupled secondary lines. Each of these secondary lines is terminated with a matched resistive load and each has a signal detector. Secondary line, L1 (and associated components, D1 and R1) is arranged so that it senses the forward wave whilst secondary line, L2 (and associated components, D2 and R2) is connected so that it senses the reflected wave.

In use, RF power is applied to the system, the meter is switched to indicate the forward power, and VR1 is adjusted for full-scale deflection. Next, the meter is switched to indicate the reflected power and the SWR is read directly from the meter scale. More complex instruments use cross-point meter movements where the two pointers simultaneously indicate forward and reflected power and the point at which they intersect (read from a third scale) gives the value of SWR present.

The point at which the SWR in a system is measured is important. To obtain the most

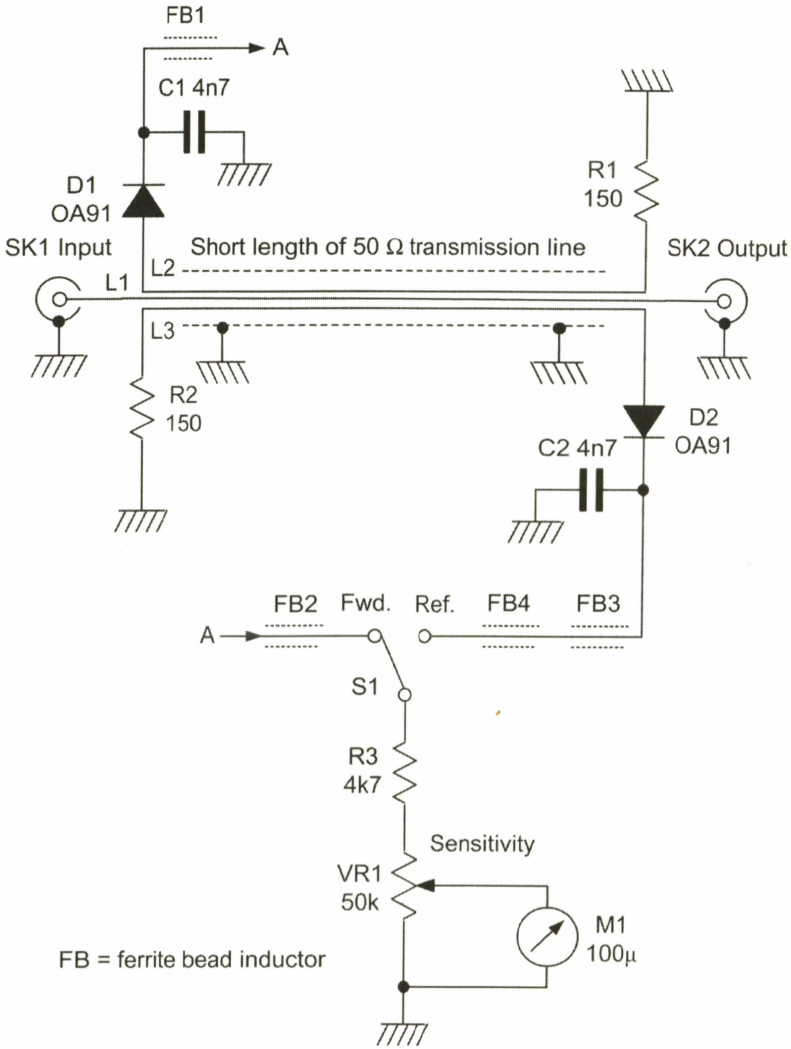

Figure 2.46 A typical SWR meter

meaningful indication of the SWR of an aerial the SWR should ideally be measured at the far end of the feeder (i.e. at the point at which the feeder is connected to the aerial). The measured SWR will actually be *lower* at the other end of the feeder (i.e. at the point at which the feeder is connected to the transmitter). The reason for this apparent anomaly is simply that the loss present in the feeder serves to improve the apparent SWR seen by the transmitter. The more lossy the feeder the better the SWR!

Sudden deterioration of antenna performance and an equally sudden increase in SWR usually points either to mechanical failure of the elements or to electrical failure of the feed-point connection, feeder or RF connectors. Gradual deterioration, on the other hand, is usually associated with corrosion or ingress of fluids into the antenna structure, feeder or antenna termination.

The SWR of virtually all practical aerial/feeder arrangements is liable to some considerable variation with frequency. For this reason, it is

advisable to make measurements at the extreme limits of the frequency range as well as at the centre frequency. In the case of a typical transmitting aerial, the SWR can vary from 2:1 at the band edges to 1.2:1 at the centre. Wideband aerials, particularly those designed primarily for receiving applications, often exhibit significantly higher values of SWR. This makes them unsuited to transmitting applications.

2.11.2 A design example

In order to pursue this a little further it's worth taking an example with some measured values to confirm that the SWR of a half-wave dipole (see page 16) really does change in the way that we have predicted. This example further underlines the importance of SWR and the need to have an accurate means of measuring it.

Assume that we are dealing with a simple half-wave dipole aerial that is designed with the following parameters:

Centre frequency:	250 MHz
Feed-line impedance:	75 ohm
Dipole length:	0.564 metres
Element diameter:	5 mm
Bandwidth:	51 MHz
Q-factor:	4.9

The calculated resistance of this aerial varies from about 52 Ω at 235 MHz to 72 Ω at 265 MHz. Over the same frequency range its reactance varies from about −37 Ω (a capacitive reactance) to +38 Ω (an inductive reactance). As predicted, zero reactance at the feed point occurs at a frequency of 250 MHz for the dipole length in question. This relationship is shown in Figure 2.47.

Measurements of SWR show a minimum value of about 1.23 occurring at about 251 MHz and an expected gradual rise either side of this value (see Fig 2.48). This graph shows that the transmitting bandwidth is actually around 33 MHz (extending from 237 MHz to around 270 MHz) for an SWR of 2:1 instead of the intended 51 MHz. Clearly this could be a problem in an application where a transmitter is to be operated with a maximum SWR of 2:1

The bandwidth limitation of a system (comprising transmitter, feeder and aerial) is usually attributable to the inability of a transmitter to operate into a load that has any appreciable amount of reactance present rather than to an inability of the aerial to radiate effectively. Most aerials will radiate happily at frequencies that are some distance away from their resonant frequency—the problem is more one of actually getting the power that the transmitter is capable of delivering into them!

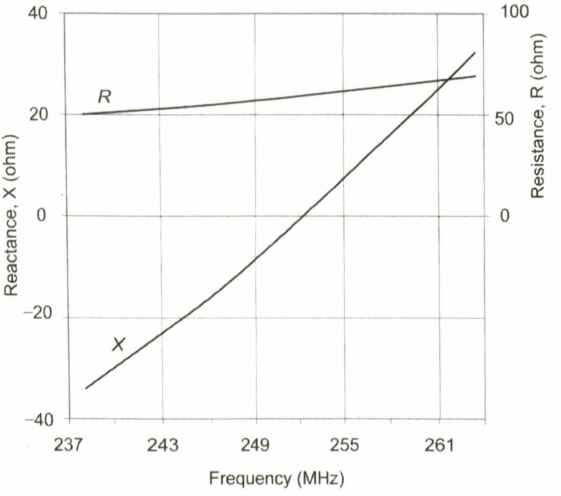

Figure 2.47 Variation of resistance and reactance for the 250 MHz half-wave dipole antenna

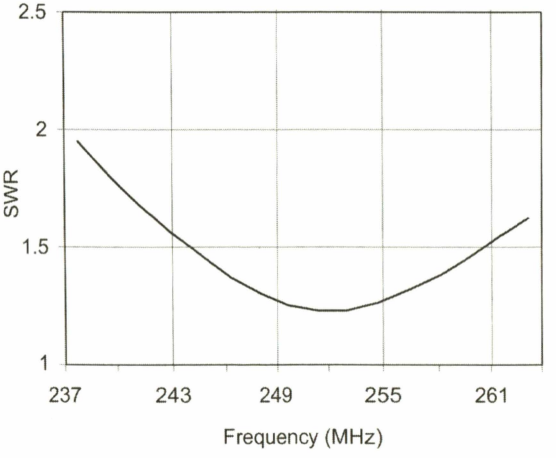

Figure 2.48 Variation of SWR for the 250 MHz half-wave dipole antenna

2.12 Waveguide

Conventional coaxial cables are ideal for coupling RF equipment at LF, HF and VHF. However, at microwave frequencies (above 3 GHz, or so), this type of feeder can have significant losses and is also restricted in terms of the peak RF power (voltage and current) that it can handle. Because of this, waveguide feeders are used to replace coaxial cables for SHF and EHF applications, such as weather radar.

A waveguide consists of a rigid or flexible metal tube (usually of rectangular cross-section) in which an electromagnetic wave is launched. The wave travels with very low loss inside the waveguide with its magnetic field component (the H-field) aligning with the broad dimension of the waveguide and the electric field component (the E-field) aligning with the narrow dimension of the waveguide (see Figure 2.49).

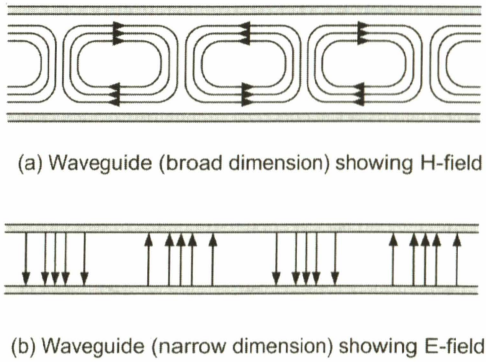

Figure 2.49 E- and H-fields in a rectangular waveguide

A simple waveguide system is shown in Figure 2.50. The SHF signal is applied to a quarter wavelength coaxial probe. The wave launched in the guide is reflected from the plane blanked-off end of the waveguide and travels through sections of waveguide to the load (in this case a horn antenna, see page 27). An example of the use of a waveguide is shown in Figure 2.51. In this application a flexible waveguide is used to feed the weather radar antenna mounted in the nose of a large passenger aircraft. The antenna comprises a flat steerable plate with a large number of radiating slots (each equivalent to a half-wave dipole fed in phase).

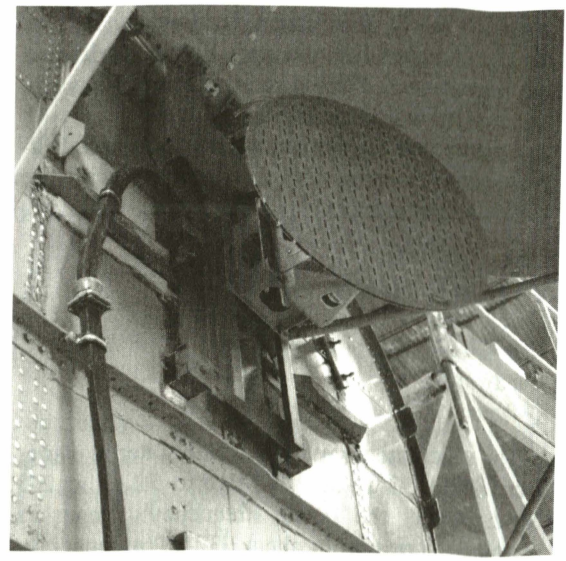

Figure 2.51 Aircraft weather radar with steerable microwave antenna and waveguide

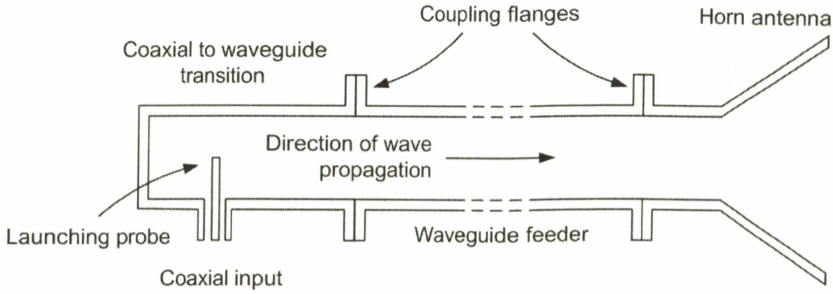

Figure 2.50 A simple waveguide system comprising launcher, waveguide and horn antenna

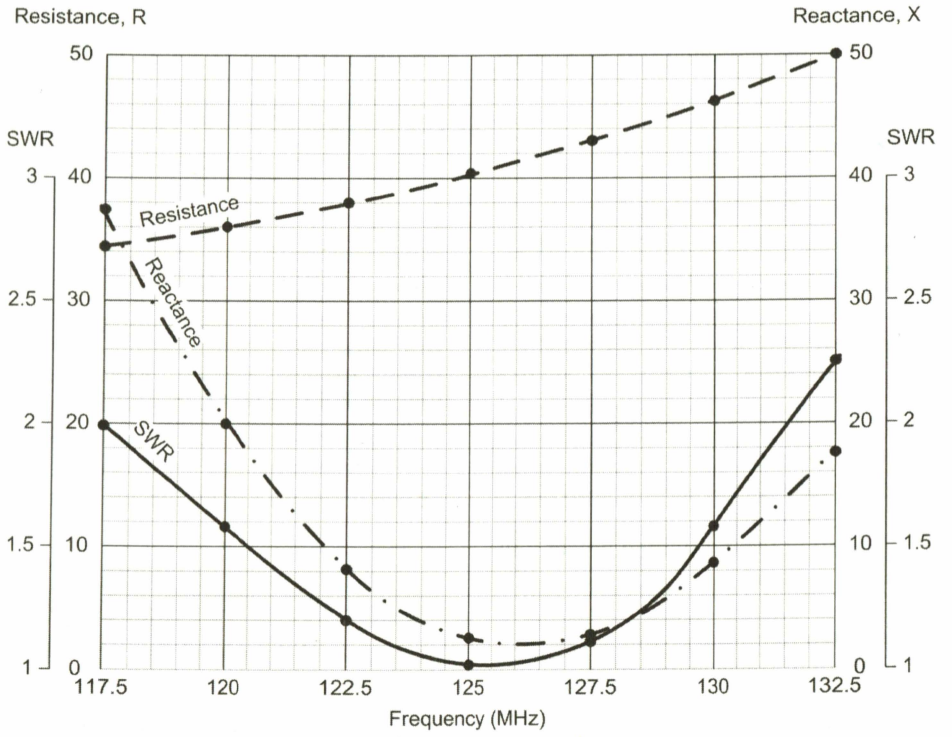

Figure 2.52 See Test your knowledge 2.9

Test your understanding 2.9

Figure 2.52 shows the frequency response of a vertical quarter-wave antenna used for local VHF communications. Use the graph to determine the following:

(a) The frequency at which the SWR is minimum
(b) The 2:1 SWR bandwidth of the antenna
(c) The reactance of the antenna at 120 MHz
(d) The resistance of the antenna at 120 MHz
(e) The frequency at which the reactance of the antenna is a minimum
(f) The frequency at which the resistance of the antenna is 50 Ω.

Test your understanding 2.10

Explain what is meant by standing wave ratio (SWR) and why this is important in determining the performance of an antenna/feeder combination.

2.13 Multiple choice questions

1. An isotropic radiator will radiate:
   (a) only in one direction
   (b) in two main directions
   (c) uniformly in all directions.

2. Another name for a quarter-wave vertical antenna is:
   (a) a Yagi antenna
   (b) a dipole antenna
   (c) a Marconi antenna.

3. A full-wave dipole fed at the centre must be:
   (a) current fed
   (b) voltage fed
   (c) impedance fed.

4. The radiation efficiency of an antenna:
   (a) increases with antenna loss resistance
   (b) decreases with antenna loss resistance
   (c) is unaffected by antenna loss resistance.

5. A vertical quarter-wave antenna will have a polar diagram in the horizontal plane which is:
   (a) unidirectional
   (b) omnidirectional
   (c) bi-directional.

6. Which one of the following gives the approximate length of a half-wave dipole for use at 300 MHz?
   (a) 50 cm
   (b) 1 m
   (c) 2 m.

7. A standing wave ratio of 1:1 indicates:
   (a) that there will be no reflected power
   (b) that the reflected power will be the same as the forward power
   (c) that only half of the transmitted power will actually be radiated.

8. Which one of the following gives the 2:1 SWR bandwidth of the antenna whose frequency response is shown in Figure 2.53?
   (a) 270 kHz
   (b) 520 kHz
   (c) 11.1 MHz.

9. Which one of the following antenna types would be most suitable for a fixed long distance HF communications link?
   (a) a corner reflector
   (b) two stacked vertical dipoles
   (c) a three-element horizontal Yagi.

10. What type of antenna is shown in Figure 2.54?
    (a) a folded dipole
    (b) a Yagi
    (c) a corner reflector.

11. When two antennas are vertically stacked the combination will have:
    (a) increased gain and decreased beamwidth
    (b) decreased gain and increased beamwidth
    (c) increased gain and unchanged beamwidth.

12. The characteristic impedance of a coaxial cable depends on:
    (a) the ratio of inductance to capacitance
    (b) the ratio of resistance to inductance
    (c) the product of the resistance and reactance (either capacitive or inductive)

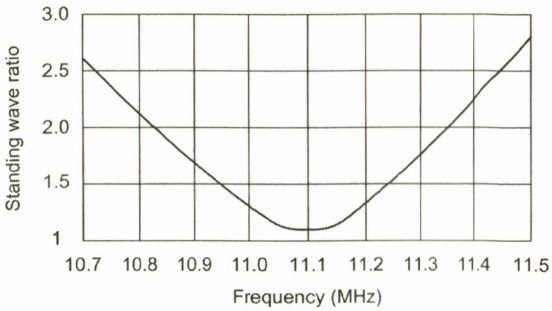

Figure 2.53 See Question 8

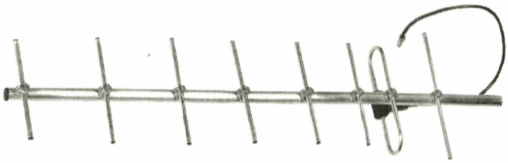

Figure 2.54 See Question 10

13. The attenuation of an RF signal in a coaxial cable:
    (a) increases with frequency
    (b) decreases with frequency
    (c) stays the same regardless of frequency.

14. If a transmission line is perfectly matched to an aerial load it will:
    (a) have no impedance
    (b) be able to carry an infinite current
    (c) appear to be infinitely long.

15. The characteristic impedance of an RF coaxial cable is:
    (a) usually between 50 and 75 Ω
    (b) either 300 or 600 Ω
    (c) greater than 600 Ω.

16. The beamwidth of an antenna is measured:
    (a) between the 50% power points
    (b) between the 70% power points
    (c) between the 90% power points.

Chapter 3 Transmitters and receivers

Transmitters and receivers are used extensively in aircraft communication and navigation systems. In conjunction with one ore more antennas, they are responsible for implementing the vital link between the aircraft, ground stations, other aircraft and satellites. This chapter provides a general introduction to the basic principles and operation of transmitters and receivers. These themes are further developed in Chapters 4 and 5.

3.1 A simple radio system

Figure 3.1 shows a simple radio communication system comprising a **transmitter** and **receiver** for use with **continuous wave** (CW) signals. Communication is achieved by simply switching (or 'keying') the radio frequency signal on and off. Keying can be achieved by interrupting the supply to the power amplifier stage or even the oscillator stage; however, it is normally applied within the driver stage that operates at a more modest power level. Keying the oscillator stage usually results in impaired frequency stability. On the other hand, attempting to interrupt the appreciable currents and/or voltages that appear in the power amplifier stage can also prove to be somewhat problematic.

The simplest form of CW receiver consists of nothing more than a radio frequency amplifier (which provides gain and selectivity) followed by a detector and an audio amplifier. The **detector** stage mixes a locally generated radio frequency signal produced by the **beat frequency oscillator** (BFO) with the incoming signal to produce a signal that lies within the audio frequency range (typically between 300 Hz and 3.4 kHz).

As an example, assume that the incoming signal is at a frequency of 100 kHz and that the BFO is producing a signal at 99 kHz. A signal at the difference between these two frequencies (1 kHz) will appear at the output of the detector stage. This will then be amplified within the audio stage before being fed to the loudspeaker.

Example 3.1.1

A radio wave has a frequency of 162.5 kHz. If a beat frequency of 1.25 kHz is to be obtained, determine the two possible BFO frequencies.

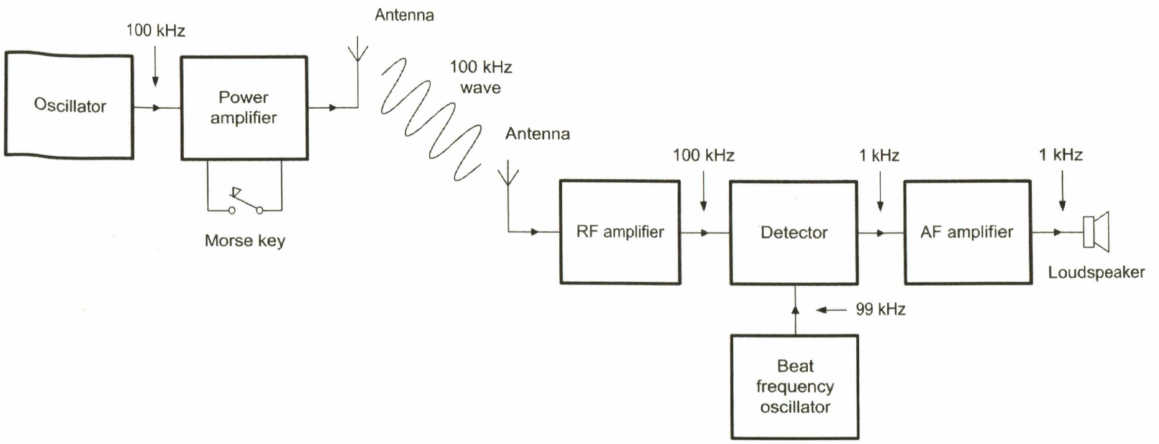

Figure 3.1 A simple radio communication system

The BFO can be above or below the incoming signal frequency by an amount that is equal to the beat frequency (i.e. the audible signal that results from the 'beating' of the two frequencies and which appears at the output of the detector stage).

Hence, $f_{BFO} = f_{RF} \pm f_{AF}$

from which:

$f_{BFO} = (162.5 \pm 1.25)$ kHz = 160.75 or 163.25 kHz

Test your understanding 3.1

An audio frequency signal of 850 Hz is produced when a BFO is set to 455.5 kHz. What is the input signal frequency to the detector?

3.1.1 Morse code

Transmitters and receivers for CW operation are extremely simple but nevertheless they can be extremely efficient. This makes them particularly useful for disaster and emergency communication or for any situation that requires optimum use of low power equipment. Signals are transmitted using the code invented by Samuel Morse (see Figures 3.2 and 3.3).

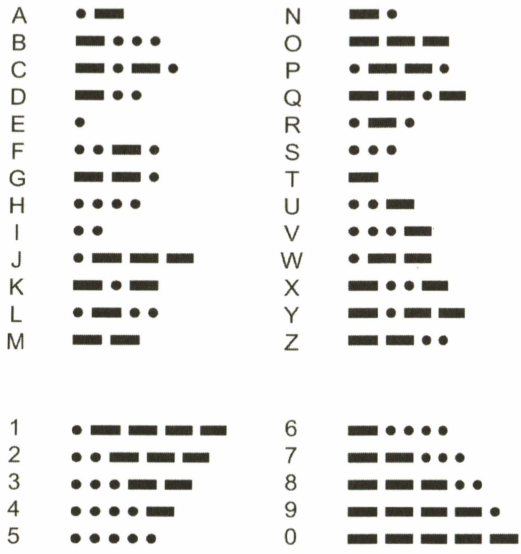

Figure 3.2 Morse code

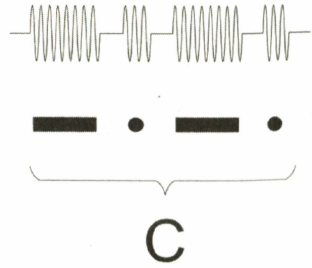

Figure 3.3 Morse code signal for the letter C

3.2 Modulation and demodulation

In order to convey information using a radio frequency carrier, the signal information must be superimposed or 'modulated' onto the carrier. **Modulation** is the name given to the process of changing a particular property of the carrier wave in sympathy with the instantaneous voltage (or current) signal.

The most commonly used methods of modulation are **amplitude modulation** (AM) and **frequency modulation** (FM). In the former case, the carrier amplitude (its peak voltage) varies according to the voltage, at any instant, of the modulating signal. In the latter case, the carrier frequency is varied in accordance with the voltage, at any instant, of the modulating signal.

Figure 3.4 shows the effect of amplitude and frequency modulating a sinusoidal carrier (note that the modulating signal is in this case also sinusoidal). In practice, many more cycles of the RF carrier would occur in the time-span of one cycle of the modulating signal. The process of modulating a carrier is undertaken by a **modulator** circuit, as shown in Figure 3.5. The input and output waveforms for amplitude and frequency modulator circuits are shown in Figure 3.6.

Demodulation is the reverse of modulation and is the means by which the signal information is recovered from the modulated carrier. Demodulation is achieved by means of a **demodulator** (sometimes also called a **detector**). The output of a demodulator consists of a reconstructed version of the original signal information present at the input of the modulator stage within the transmitter. The input and output waveforms for amplitude and frequency

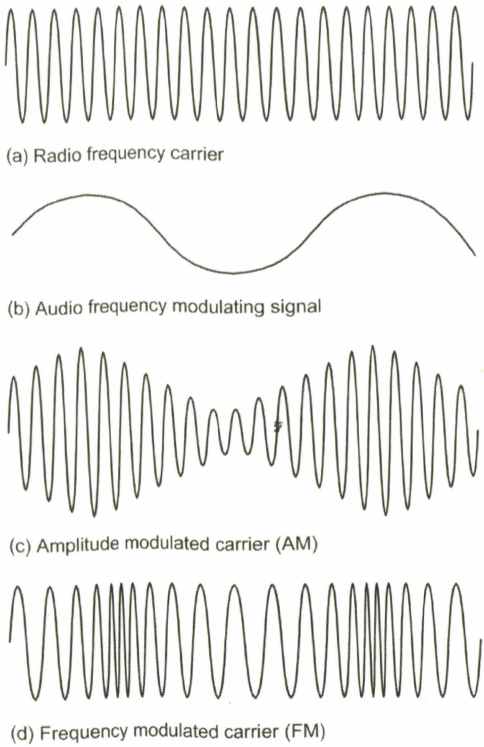

Figure 3.4 Modulated waveforms

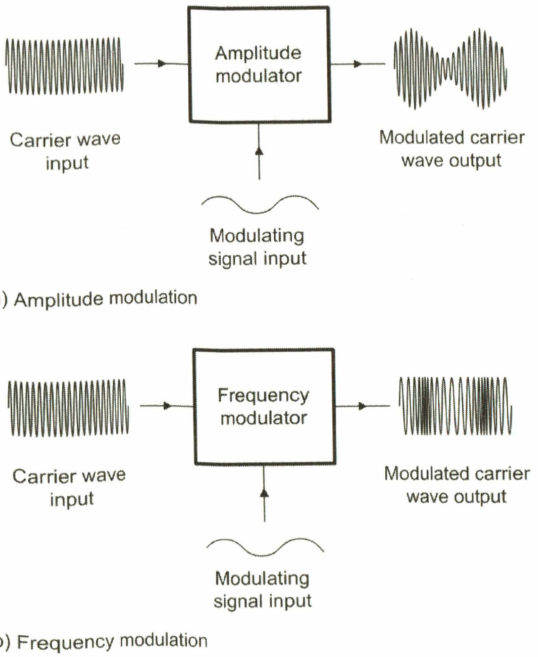

Figure 3.5 Action of a modulator

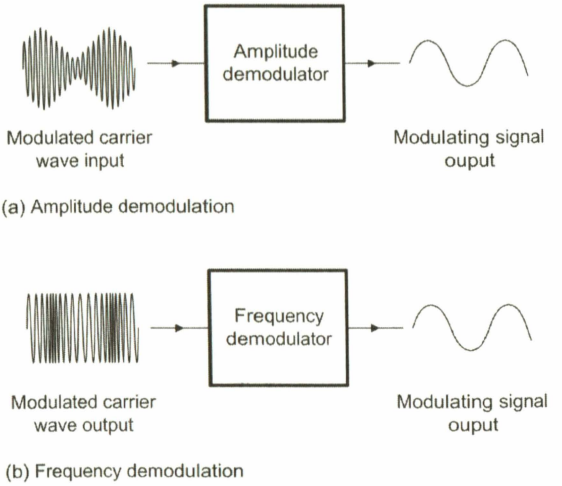

Figure 3.6 Action of a demodulator

modulator circuits are shown in Figure 3.6. We shall see how this works a little later.

3.3 AM transmitters

Figure 3.7 shows the block schematic of a simple AM transmitter. An accurate and stable RF oscillator generates the radio frequency **carrier** signal. The output of this stage is then amplified and passed to a modulated RF power amplifier stage. The inclusion of an amplifier between the RF oscillator and the modulated stage also helps to improve frequency stability.

The low-level signal from the microphone is amplified using an AF amplifier before it is passed to an AF power amplifier. The output of the power amplifier is then fed as the supply to the modulated RF power amplifier stage. Increasing and reducing the supply to this stage is instrumental in increasing and reducing the amplitude of its RF output signal.

The modulated RF signal is then passed through an **antenna coupling unit**. This unit matches the antenna to the RF power amplifier and also helps to reduce the level of any unwanted harmonic components that may be present. The AM transmitter shown in Figure 3.7 uses high-level modulation in which the modulating signal is applied to the final RF power amplifier stage.

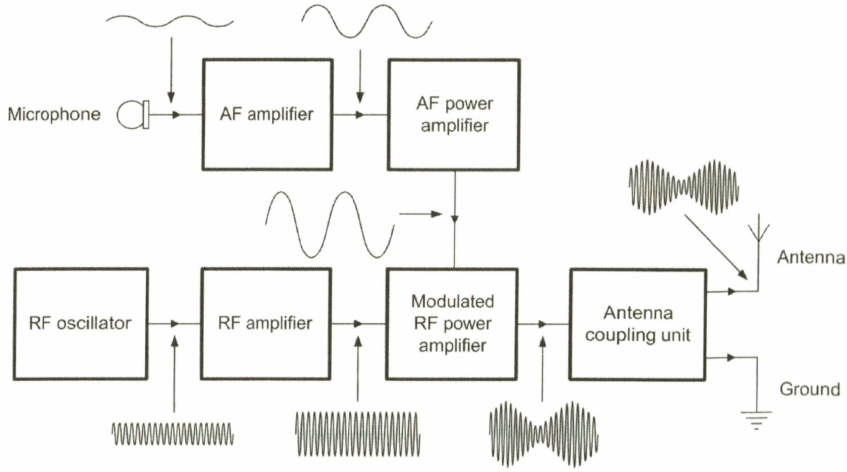

Figure 3.7 An AM transmitter using high-level modulation

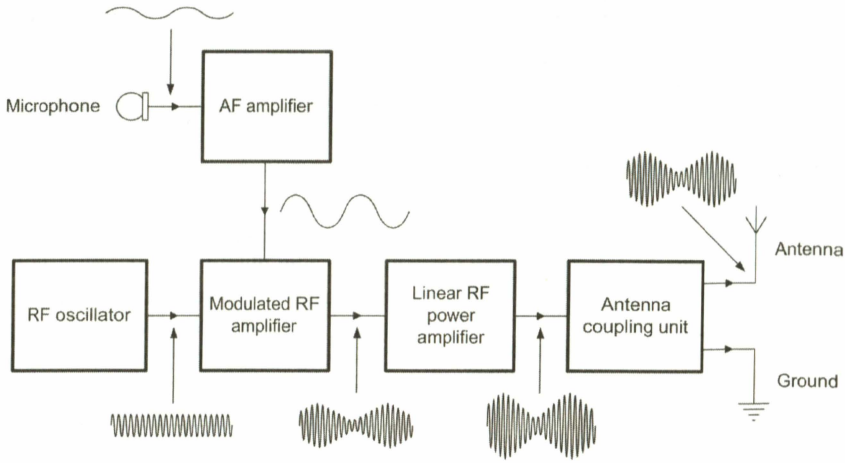

Figure 3.8 An AM transmitter using low-level modulation

An alternative to high-level modulation of the carrier wave is shown in Figure 3.8. In this arrangement the modulation is applied to a low-power RF amplifier stage and the amplitude modulated signal is then further amplified by the final RF power amplifier stage. In order to prevent distortion of the modulated waveform this final stage *must* operate in linear mode (the output waveform must be a faithful replica of the input waveform). Low-level modulation avoids the need for an AF power amplifier.

3.4 FM transmitters

Figure 3.9 shows the block schematic of a simple FM transmitter. Once again, an accurate and stable RF oscillator generates the radio frequency carrier signal. As with the AM transmitter, the output of this stage is amplified and passed to an RF power amplifier stage. Here again, the inclusion of an amplifier between the RF oscillator and the RF power stage helps to improve frequency stability.

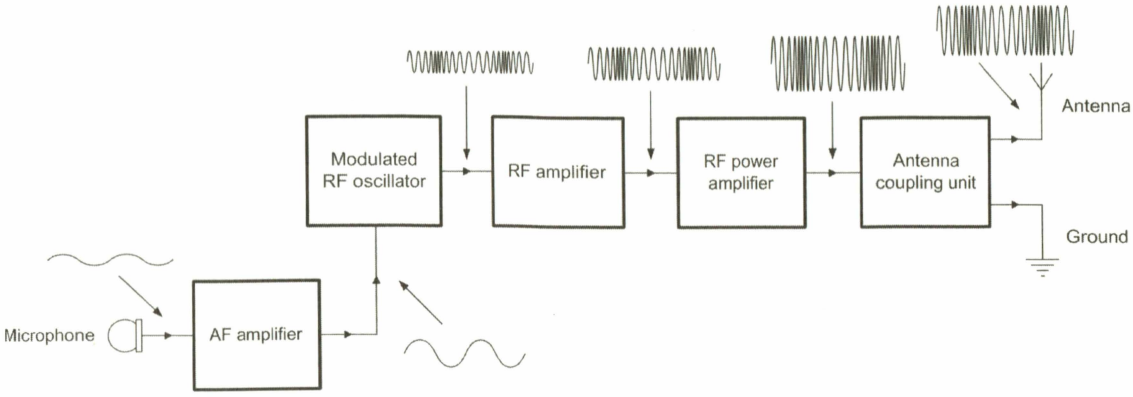

Figure 3.8 An FM transmitter

The low-level signal from the microphone is amplified using an AF amplifier before it is passed to a **variable reactance** element (see Chapter 4) within the RF oscillator tuned circuit. The application of the AF signal to the variable reactance element causes the frequency of the RF oscillator to increase and decrease in sympathy with the AF signal.

As with the AM transmitter, the final RF signal from the power amplifier is passed through an antenna coupling unit that matches the antenna to the RF power amplifier and also helps to reduce the level of any unwanted harmonic components that may be present. Further information on transmitters will be found in Chapters 4 and 5.

3.5 Tuned radio frequency receivers

Tuned radio frequency (TRF) receivers provide a means of receiving local signals using fairly minimal circuitry. The simplified block schematic of a TRF receiver is shown in Figure 3.9.

The signal from the antenna is applied to an RF amplifier stage. This stage provides a moderate amount of gain at the signal frequency. It also provides **selectivity** by incorporating one or more tuned circuits at the signal frequency. This helps the receiver to reject signals that may be present on adjacent channels.

The output of the RF amplifier stage is applied to the demodulator. This stage recovers the audio frequency signal from the modulated RF signal. The demodulator stage may also incorporate a tuned circuit to further improve the selectivity of the receiver.

The output of the demodulator stage is fed to the input of the AF amplifier stage. This stage increases the level of the audio signal from the demodulator so that it is sufficient to drive a loudspeaker.

TRF receivers have a number of limitations with regard to sensitivity and selectivity and this makes this type of radio receiver generally unsuitable for use in commercial radio equipment.

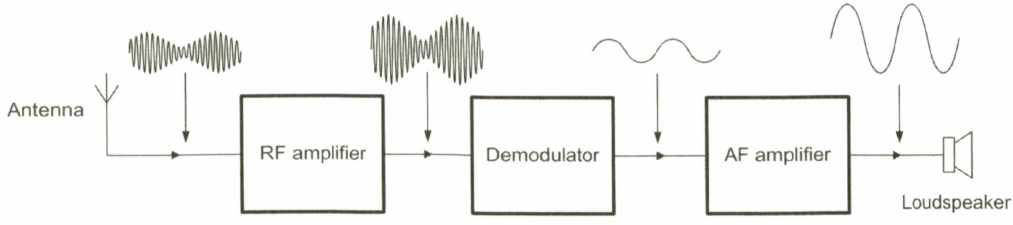

Figure 3.9 A TRF receiver

3.6 Superhet receivers

Superhet receivers provide both improved **sensitivity** (the ability to receive weak signals) and improved **selectivity** (the ability to discriminate signals on adjacent channels) when compared with TRF receivers. Superhet receivers are based on the **supersonic-heterodyne** principle where the wanted input signal is converted to a fixed **intermediate frequency** (IF) at which the majority of the gain and selectivity is applied. The intermediate frequency chosen is generally 455 kHz or 1.6 MHz for AM receivers and 10.7 MHz for communications and FM receivers. The simplified block schematic of a simple superhet receiver is shown in Figure 3.11.

The signal from the antenna is applied to an **RF amplifier** stage. As with the TRF receiver, this stage provides a moderate amount of gain at the signal frequency. The stage also provides selectivity by incorporating one or more tuned circuits at the signal frequency.

The output of the RF amplifier stage is applied to the **mixer** stage. This stage combines the RF signal with the signal derived from the **local oscillator** (LO) stage in order to produce a signal at the **intermediate frequency** (IF). It is worth noting that the output signal produced by the mixer actually contains a number of signal components, including the sum and difference of the signal and local oscillator frequencies as well as the original signals plus harmonic components. The wanted signal (i.e. that which corresponds to the IF) is passed (usually by some form of filter—see page 48) to the IF amplifier stage. This stage provides amplification as well as a high degree of selectivity.

The output of the IF amplifier stage is fed to the demodulator stage. As with the TRF receiver, this stage is used to recover the audio frequency signal from the modulated RF signal.

Finally, the AF signal from the demodulator stage is fed to the AF amplifier. As before, this stage increases the level of the audio signal from the demodulator so that it is sufficient to drive a loudspeaker.

In order to cope with a wide variation in signal amplitude, superhet receivers invariably incorporate some form of **automatic gain control** (AGC). In most circuits the DC level from the AM demodulator (see page 51) is used to control the gain of the IF and RF amplifier stages. As the signal level increases, the DC level from the demodulator stage increases and this is used to reduce the gain of both the RF and IF amplifiers.

The superhet receiver's intermediate frequency f_{IF} is the difference between the signal frequency, f_{RF}, and the local oscillator frequency, f_{LO}. The desired local oscillator frequency can be calculated from the relationship:

$$f_{LO} = f_{RF} \pm f_{IF}$$

Note that in most cases (and in order to simplify tuning arrangements) the local oscillator operates above the signal frequency, i.e. $f_{LO} = f_{RF} + f_{IF}$. So, for example, a superhet receiver with a 1.6 MHz IF tuned to receive a signal at 5.5 MHz will operate with an LO at (5.5 + 1.6) = 7.1 MHz.

Figure 3.10 shows the relationship between the frequencies entering and leaving a mixer stage.

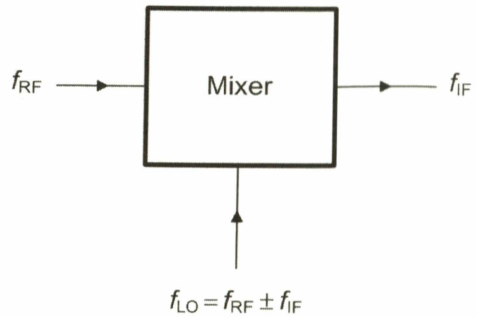

Figure 3.10 Action of a mixer stage in a superhet receiver

Example 3.2

A VHF Band II FM receiver with a 10.7 MHz IF covers the signal frequency range 88 MHz to 108 MHz. Over what frequency range should the local oscillator be tuned?

Using $f_{LO} = f_{RF} + f_{IF}$ when f_{RF} = 88 MHz gives f_{LO} = 88 MHz + 10.7 MHz = 98.7 MHz

Using $f_{LO} = f_{RF} + f_{IF}$ when f_{RF} = 108 MHz gives f_{LO} = 108 MHz + 10.7 MHz = 118.7 MHz.

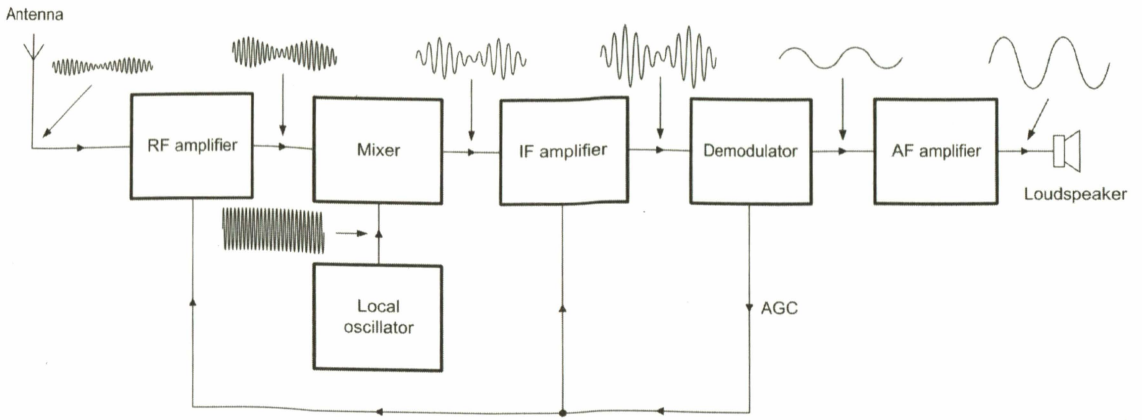

Figure 3.11 A superhet receiver

3.7 Selectivity

Radio receivers use tuned circuits in order to discriminate between incoming signals at different frequencies. Figure 3.12 shows two basic configurations for a tuned circuit; series and parallel. The impedance-frequency characteristics of these circuits are shown in Figure 3.13. It is important to note that the impedance of the series tuned circuit falls to a very low value at the resonant frequency whilst that for a parallel tuned circuit increases to a very high value at resonance. For this reason, series tuned circuits are sometimes known as **acceptor circuits**. Parallel tuned circuits, on the other hand, are sometimes referred to as **rejector circuits**.

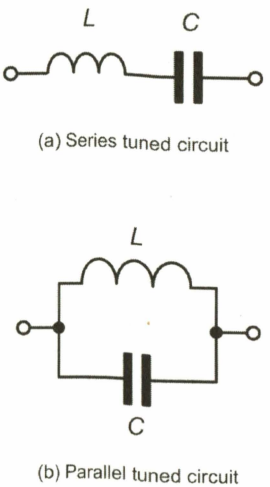

Figure 3.12 Series and parallel tuned circuits

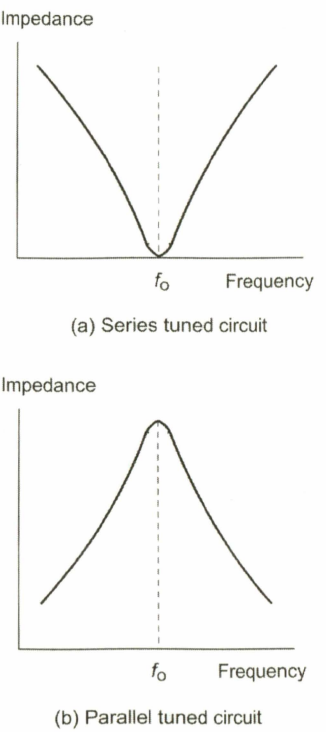

Figure 3.13 Frequency response of the tuned circuits shown in Figure 3.12

The frequency response (voltage plotted against frequency) of a parallel tuned circuit is shown in Figure 3.14. This characteristic shows how the signal developed across the circuit reaches a maximum at the resonant frequency (f_o). The range of frequencies accepted by the circuit is normally defined in relation to the half-power (−3dB power) points. These points correspond to 70.7% of the maximum voltage and the frequency range between these points is referred to as the **bandwidth** of the tuned circuit.

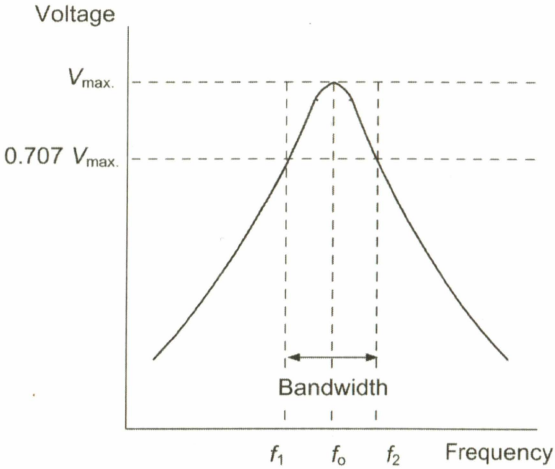

Figure 3.14 Frequency response for a parallel tuned circuit

A perennial problem with the design of the TRF receivers that we met earlier is the lack of selectivity due to the relatively wide bandwidth of the RF tuned circuits. An RF tuned circuit will normally exhibit a quality factor (***Q*-factor**) of about 100. The relationship between bandwidth, Δf, Q-factor, Q, and resonant frequency, f_o, for a tuned circuit is given by:

$$\Delta f = \frac{f_o}{Q}$$

As an example, consider a tuned circuit which has a resonant frequency of 10 MHz and a Q-factor of 100. Its bandwidth will be:

$$\Delta f = \frac{f_o}{Q} = \frac{10\text{ MHz}}{100} = 100\text{ kHz}$$

Clearly many strong signals will appear within this range and a significant number of them may be stronger than the wanted signal. With only a single tuned circuit at the signal frequency, the receiver will simply be unable to differentiate between the wanted and unwanted signals.

Selectivity can be improved by adding additional tuned circuits at the signal frequency. Unfortunately, the use of multiple tuned circuits brings with it the problem of maintaining accurate tuning of each circuit throughout the tuning range of the receiver. Multiple 'ganged' variable capacitors (or accurately matched variable capacitance diodes) are required.

A **band-pass filter** can be constructed using two parallel tuned circuits coupled inductively (or capacitively), as shown in Figure 3.15. The frequency response of this type of filter depends upon the degree of coupling between the two tuned circuits. Optimum results are obtained with a critical value of coupling (see Figure 3.16). Too great a degree of coupling results in a 'double-humped' response whilst too little coupling results in a single peak in the response curve accompanied by a significant loss in signal. Critical coupling produces a relatively 'flat' pass-band characteristic accompanied by a reasonably steep fall-off either side of the pass-band.

Band-pass filters are often found in the IF stages of superhet receivers where they are used to define and improve the receiver's selectivity. Where necessary, a higher degree of selectivity and **adjacent channel rejection** can be achieved by using a multi-element ceramic, mechanical, or crystal filter. A typical 455 kHz crystal filter (for use with an HF receiver) is shown in Figure 3.18. This filter provides a bandwidth of 9 kHz and a very high degree of attenuation at the two **adjacent channels** on either side of the pass-band.

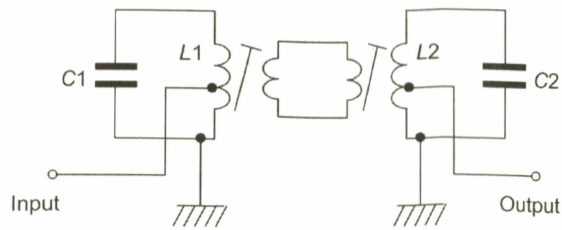

Figure 3.15 A typical band-pass filter

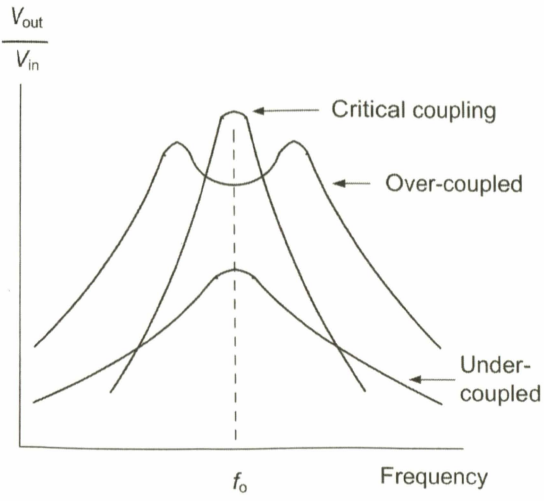

Figure 3.16 Response of coupled tuned circuits

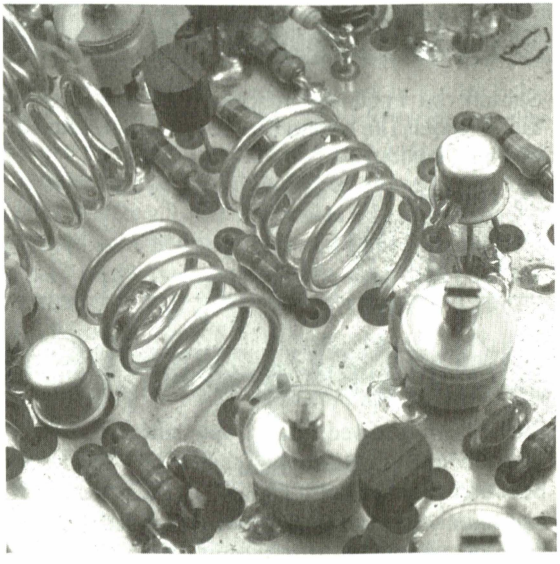

Figure 3.17 Band-pass coupled tuned circuits in the RF stages of a VHF receiver

Test your understanding 3.2

Sketch the block schematic of a superhet receiver and state the function of each of the blocks.

Test your understanding 3.3

An HF communications receiver has an intermediate frequency of 455 kHz. What frequency must the local oscillator operate at when the receiver is tuned to 5.675 MHz?

Test your understanding 3.4

A tuned circuit IF filter is to operate with a centre frequency of 10.7 MHz and a bandwidth of 150 kHz. What Q-factor is required?

Test your understanding 3.5

The ability of a receiver to reject signals on adjacent channels is determined by the selectivity of its IF stages. Explain why this is.

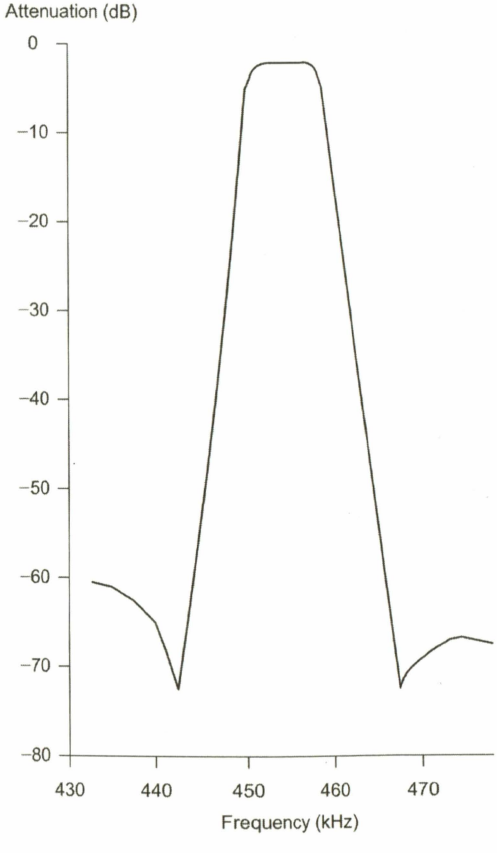

Figure 3.18 Mechanical IF filter response

Test your understanding 3.6

Sketch the frequency response of two coupled tuned circuits. In relation to your answer, explain what is meant by:

(a) overcoupling
(b) undercoupling
(c) critical coupling.

3.8 Image channel rejection

Earlier we showed that a superhet receiver's intermediate frequency, f_{IF}, is the difference between the signal frequency, f_{RF}, and the local oscillator frequency, f_{LO}. We also derived the following formula for determining the frequency of the local oscillator signal:

$$f_{LO} = f_{RF} \pm f_{IF}$$

The formula can be rearranged to make f_{RF} the subject, as follows:

$$f_{RF} = f_{LO} \pm f_{IF}$$

In other words, there are two potential radio frequency signals that can mix with the local oscillator signal in order to provide the required IF. One of these is the **wanted signal** (i.e. the signal present on the channel to which the receiver is tuned) whilst the other is referred to as the **image channel**.

Being able to reject any signals that may just happen to be present on the image channel of a superhet receiver is an important requirement of any superhet receiver. This can be achieved by making the RF tuned circuits as selective as possible (so that the image channel lies well outside their pass-band). The problem of rejecting the image channel is, however, made easier by selecting a relatively high value of intermediate frequency (note that, in terms of frequency, the image channel is spaced at *twice* the IF away from the wanted signal).

Figure 3.19 shows the relationship that exists between the wanted signal, local oscillator signal, and the image channel for receivers with (a) a 455 kHz IF and (b) a 1.6 MHz IF. A typical response curve for the RF tuned circuits of the receiver (assuming a typical Q-factor) has been superimposed onto both of the graphs (the same response curve has been used in both cases but the frequency scale has been changed for the two different intermediate frequencies). From Figure 3.19 is should be clear that whilst the image channel for the 455 kHz IF falls inside the RF tuned circuit response, that for the 1.6 MHz IF falls well outside the curve.

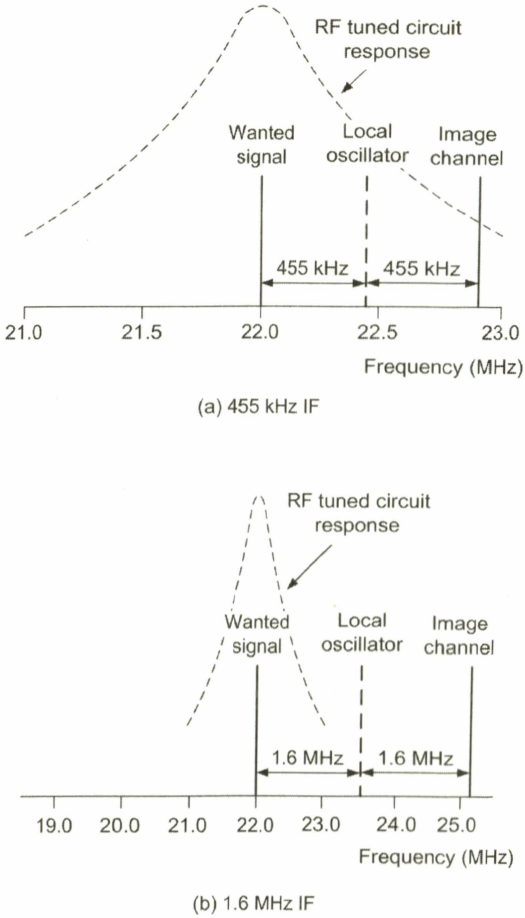

Figure 3.19 Image channel rejection

Test your understanding 3.7

An FM receiver tuned to 118.6 MHz has an IF of 10.7 MHz. Determine the frequency of the image channel given that the local oscillator operates above the signal frequency.

3.9 Automatic gain control

The signal levels derived from the antennas fitted to an aircraft can vary from as little as 1 μV to more than 1,000 μV. Unfortunately, this presents us with a problem when signals are to be amplified. The low-level signals benefit from the maximum amount of gain present in a system whilst the larger signals require correspondingly less gain in order to avoid non-linearity and consequent distortion of the signals and modulation. AM, CW and SSB receivers therefore usually incorporate some means of **automatic gain control** (AGC) that progressively reduces the signal gain as the amplitude of the input signal increases (see Figure 3.20).

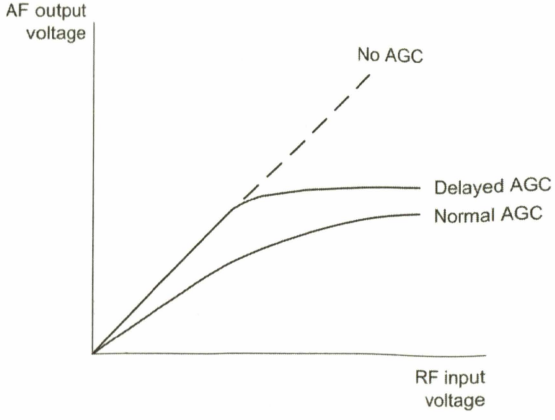

Figure 3.20 AGC action

In simple receivers, the AGC voltage (a DC voltage dependent on signal amplitude) is derived directly from the signal detector and is fed directly to the bias circuitry of the IF stages (see Figure 3.11). In more sophisticated equipment, the AGC voltage is amplified before being applied to the IF and RF stages. There is, in fact, no need to reduce the signal gain for small RF signals. Hence, in more sophisticated equipment, the AGC circuits may be designed to provide a 'delay' so that there is no gain reduction until a predetermined threshold voltage is exceeded. In receivers that feature **delayed AGC** there is no gain reduction until a certain threshold voltage is achieved. Beyond this, there is a progressive reduction in gain (see Figure 3.20).

3.10 Double superhet receivers

The basic superhet receiver shown in Figure 3.11 has an intermediate frequency (IF) of usually either 455 kHz, 1.6 MHz or 10.7 MHz. In order to achieve an acceptable degree of image channel rejection (recall that the image channel is spaced by twice the IF away from the wanted frequency) a 455 kHz IF will generally be satisfactory for the reception of frequencies up to about 5 MHz, whilst an IF of 1.6 MHz (or greater) is often used at frequencies above this. At VHF, intermediate frequencies of 10.7 MHz (or higher) are often used.

Unfortunately, the disadvantage of using a high IF (1.6 MHz or 10.7 MHz) is simply that the bandwidth of conventional tuned circuits is too wide to provide a satisfactory degree of selectivity and thus elaborate (and expensive) IF filters are required.

To avoid this problem and enjoy the best of both worlds, many high-performance receivers make use of *two* separate intermediate frequencies; the first IF provides a high degree of image channel rejection whilst the second IF provides a high degree of selectivity. Such receivers are said to use **dual conversion**.

A typical double superhet receiver is shown in Figure 3.21. The incoming signal frequency (26 MHz in the example) is converted to a first IF at 10.695 MHz by mixing the RF signal with a first local oscillator signal at 36.695 MHz (note that 36.695 MHz − 26 MHz = 10.695 MHz). The first IF signal is then filtered and amplified before it is passed to the second mixer stage.

The input of the second mixer (10.695 MHz) is then mixed with the second local oscillator signal at 10.240 MHz. This produces the second IF at 455 kHz (note that 10.695 MHz − 10.240 MHz = 455 kHz). The second IF signal is then filtered and amplified. It is worth noting that the bulk of the gain is usually achieved in the second IF stages and there will normally be several stages of amplification at this frequency.

In order to tune the receiver, the first local oscillator is either made variable (using conventional tuned circuits) or is synthesised using digital phase-locked loop techniques (see page 53). The second local oscillator is almost invariably crystal controlled in order to ensure good stability and an accurate relationship

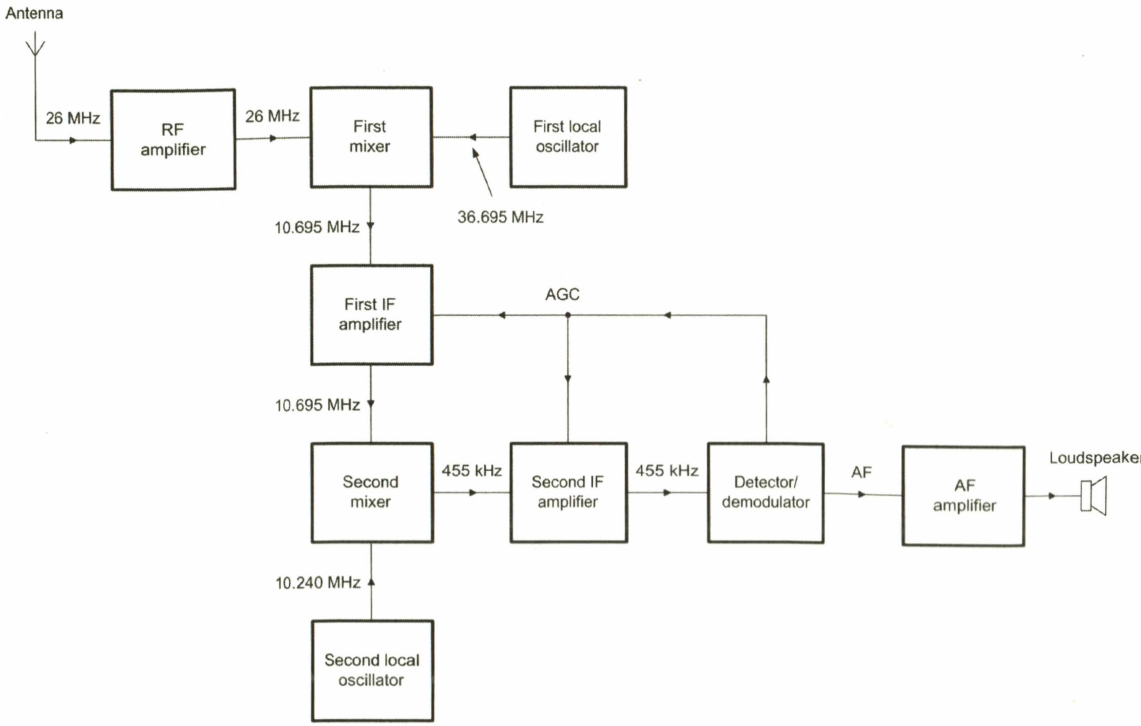

Figure 3.21 A double conversion superhet receiver

between the two intermediate frequencies. Typical IF bandwidths in the receiver shown in Figure 3.21 are 75 kHz at the first IF and a mere 6 kHz in the second IF.

The first IF filter (not shown in Figure 3.21) is connected in the signal path between the first and second mixer. Where a stage of amplification is provided at the first IF, the filter precedes the amplifier stage. The requirements of the filter are not stringent since the ultimate selectivity of the receiver is defined by the second IF filter which operates at the much lower frequency of 455 kHz.

There are, however, some good reasons for using a filter which offers a high degree of rejection of the unwanted second mixer image response which occurs at 9.785 MHz. If this image is present at the input of the second mixer, it will mix with the second mixer injection at 10.240 MHz to produce a second IF component of 455 kHz, as shown in Figure 3.22. The function of the first IF filter is thus best described as **roofing**: bandwidth is a less important

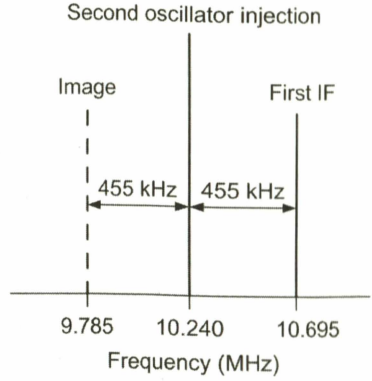

Figure 3.22 Second oscillator signal

Test your understanding 3.8

Explain why AGC is necessary in an HF communications receiver and how it is applied.

3.11 Digital frequency synthesis

The signals used within high-specification radio frequency equipment (both receivers and transmitters) must be both accurate and stable. Where operation is restricted to a single frequency or a limited number of channels, quartz crystals may be used to determine the frequency of operation. However, when a large number of frequencies must be covered, it is necessary to employ digital frequency generating techniques in which a single quartz crystal oscillator is used in conjunction with LSI circuitry to generate a range of discrete frequencies. These frequencies usually have a constant channel spacing (typically 3 kHz, 8.33 kHz, 9 kHz, 12.5 kHz, 25 kHz, etc.). Frequencies are usually selected by means of a rotary switch, push-buttons or a keypad but can also be stored in semiconductor memories.

Digital **phase locked loop** (PLL) circuitry was first used in military communications equipment in the mid-1960s and resulted from the need to generate a very large number of highly accurate and stable frequencies in a multi-channel frequency synthesiser. In this particular application cost was not a primary consideration and highly complex circuit arrangements could be employed involving large numbers of discrete components and integrated circuits.

Phase locked loop techniques did not arrive in mass-produced equipment until the early 1970s. By comparison with today's equipment such arrangements were crude, employing as many as nine or ten i.c. devices. Complex as they were, these PLL circuits were more cost-effective than their comparable multi-crystal mixing synthesiser counterparts. With the advent of large scale integration in the late 1970s, the frequency generating unit in most radio equipment could be reduced to one, or perhaps two, LSI devices together with a handful of additional discrete components. The cost-effectiveness of this approach is now beyond question and it is unlikely that, at least in the most basic equipment, much further refinement will be made. In the area of more complex receivers and transceivers, however, we are now witnessing a further revolution in the design of synthesised radio equipment with the introduction of dedicated microcomputer controllers which permit keypad programmed channel selection and scanning with pause, search, and lock-out facilities.

The most basic form of PLL consists of a phase detector, filter, DC amplifier and voltage controlled oscillator (VCO), as shown in Figure 3.23. The VCO is designed so that its free-running frequency is at, or near, the reference frequency. The phase detector senses any error between the VCO and reference frequencies. The output of the phase detector is fed, via a suitable filter and amplifier, to the DC control voltage input of the VCO. If there is any discrepancy

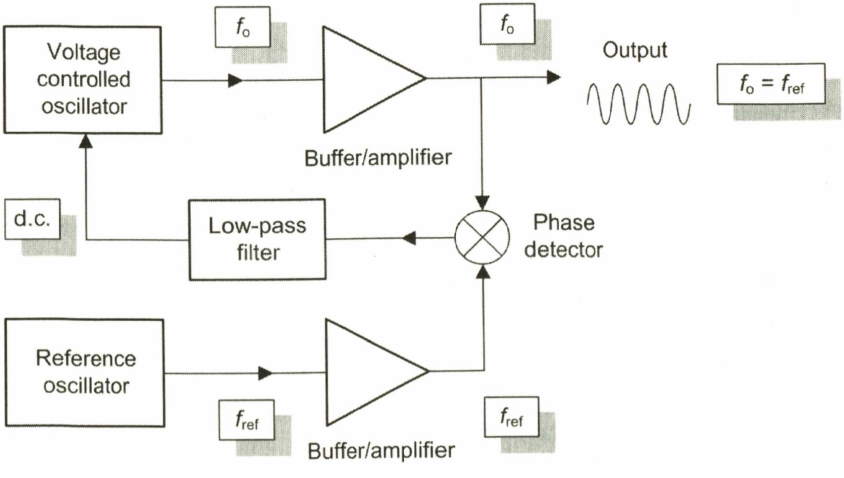

Figure 3.23 A simple phase locked loop

between the VCO output and the reference frequency, an error voltage is produced and this is used to correct the VCO frequency. The VCO thus remains locked to the reference frequency. If the reference frequency changes, so does the VCO. The bandwidth of the system is determined by the time constants of the loop filter. In practice, if the VCO and reference frequencies are very far apart, the PLL may be unable to lock.

The frequency range over which the circuit can achieve lock is known as the **capture range**. It should be noted that a PLL takes a finite time to achieve a locked condition and that the VCO locks to the mean value of the reference frequency.

The basic form of PLL shown in Figure 3.23 is limited in that the reference frequency is the same as that of the VCO and no provision is incorporated for changing it, other than by varying the frequency of the reference oscillator itself. In practice, it is normal for the phase detector to operate at a much lower frequency than that of the VCO output and thus a frequency divider is incorporated in the VCO feedback path (see Figure 3.24). The frequency presented to the phase detector will thus be f_o/n, where n is the **divisor**.

When the loop is locked (i.e. when no phase error exists) we can infer that:

$$f_{ref} = \frac{f_o}{n} \quad \text{or} \quad f_o = n f_{ref}$$

A similar divider arrangement can also be used at the reference input to the phase detector, as shown in Figure 3.25. The frequency appearing at the reference input to the phase detector will be f_{ref}/m and the loop will be locked when:

$$\frac{f_{ref}}{m} = \frac{f_o}{n} \quad \text{or} \quad f_o = \frac{n}{m} f_{ref}$$

Thus if f_{ref}, n and m were respectively 100 kHz, 2,000 and 10, the output frequency, f_{out}, would be:

$$(2{,}000/10) \times 100 \text{ kHz} = 20 \text{ MHz}$$

If the value of n can be made to change by replacing the fixed divider with a programmable divider, different output frequencies can be generated. If, for example, n was variable from 2,000 to 2,100 in steps of 1, then f_{out} would range from 20 MHz to 21 MHz in 10 kHz steps. Figure 3.26 shows the basic arrangement of a PLL which incorporates a programmable divider driven from the equipment's digital frequency controller (usually a microprocessor).

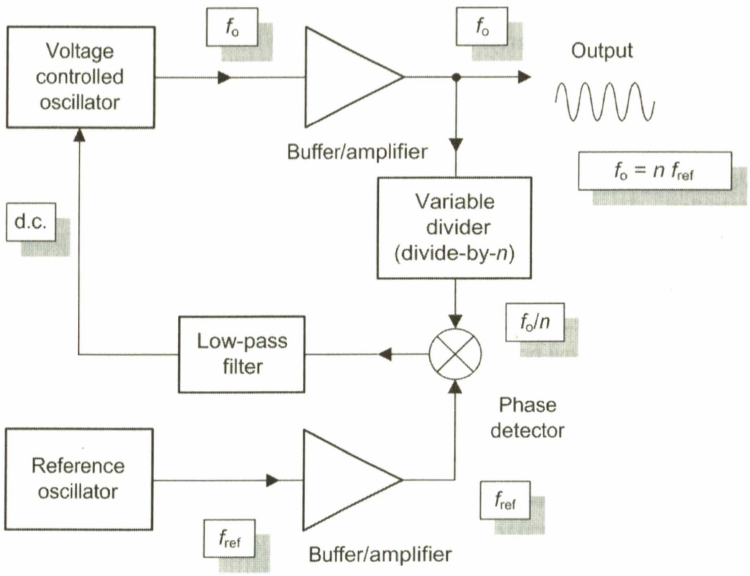

Figure 3.24 A phase locked loop with frequency divider

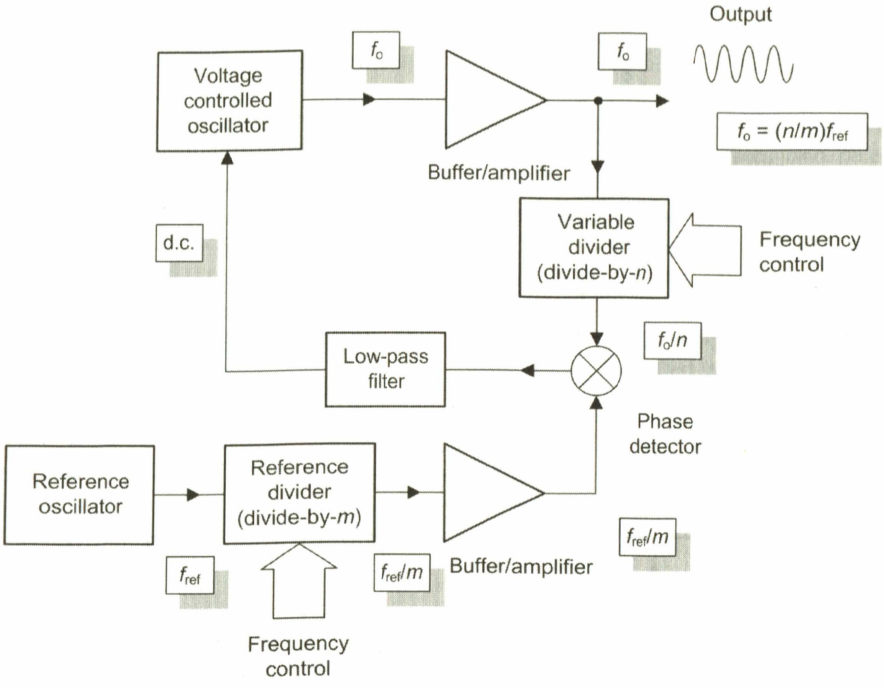

Figure 3.25 A complete digital frequency synthesiser

In practice, problems can sometimes arise in high-frequency synthesisers where the programmable frequency divider, or **divide-by-*n* counter**, has a restricted upper frequency limit. In such cases it will be necessary to mix the high-frequency VCO output with a stable locally generated signal derived from a crystal oscillator. The mixer output (a relatively low difference frequency) will then be within the range of the programmable divider.

3.12 A design example

We shall bring this chapter to a conclusion by providing a design example of a complete HF communications receiver. This receiver was developed by the author for monitoring trans-Atlantic HF communications in the 5.5 MHz aircraft band. The circuit caters for the reception of AM, CW (Morse code) and SSB signals (see Chapter 5). To aid stability, the CIO/BFO frequency is controlled by means of a ceramic resonator. The RF performance is greatly enhanced by the use of dual gate MOSFET devices in the RF amplifier, mixer, and product detector stages and junction gate FETs in the local oscillator stage. These devices offer high gain with excellent strong-signal handling capability. They also permit simple and effective coupling between stages without the need for complex impedance matching.

The receiver is tunable over the frequency range 5.0 MHz to 6.0 MHz. Used in conjunction with a simple antenna, it offers reception of aircraft signals at distances in excess of 1,000 km. The receiver is based on the single superhet principle operating with an intermediate frequency of 455 kHz. This frequency is low enough to ensure reasonable selectivity with just two stages of IF amplification and with the aid of a low-cost 455 kHz filter. Adequate image rejection is provided by two high-Q ganged RF tuned circuits.

The design uses conventional discrete component circuitry in all stages with the exception of the audio amplifier/output stage and voltage regulator. This approach ensures that the receiver is simple and straightforward to align and does not suffer from the limitations

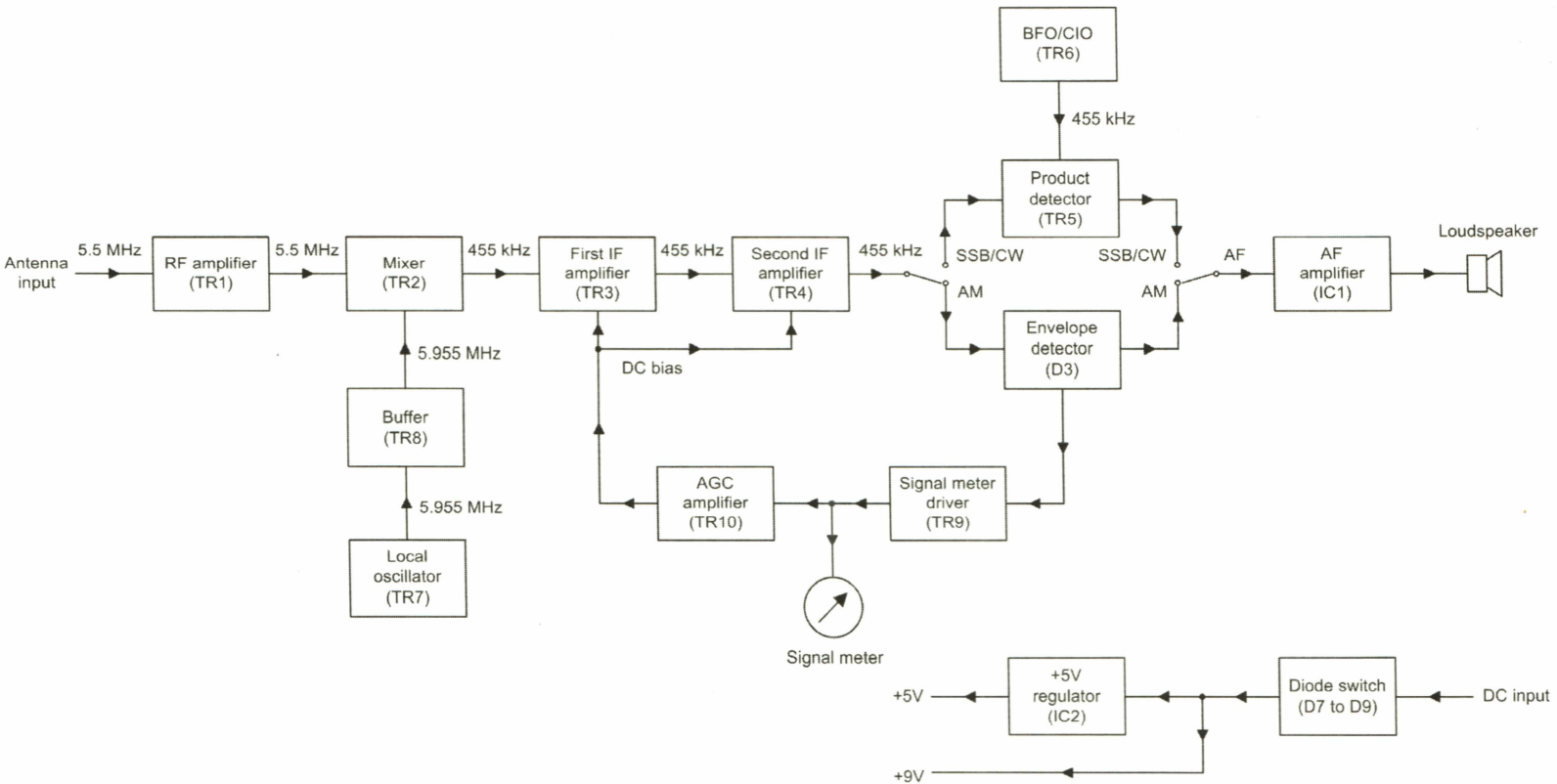

Figure 3.26 Superhet receiver design example

associated with several of the popular integrated circuit IF stages.

The block diagram of the receiver is shown in Figure 3.26. The vast majority of the receiver's gain and selectivity is associated with the two IF stages, TR3 and TR4. These two stages provide over 40 dB of voltage gain and the three IF tuned circuits and filter are instrumental in reducing the IF bandwidth to about 3.4 kHz for SSB reception. The RF stage (TR1) provides a modest amount of RF gain (about 20 dB at the maximum RF gain setting) together with a significant amount of image channel rejection.

The local oscillator stage (TR7) provides the necessary local oscillator signal which tunes from 5.455 MHz to 6.455 MHz. The local oscillator signal is isolated from the mixer stage and the LO output by means of the buffer stage, TR8.

The receiver incorporates two detector stages, one for AM and one for CW and SSB. The AM detector makes use of a simple diode envelope detector (D3) whilst the CW/SSB detector is based on a product detector (TR5). This stage offers excellent performance with both weak and strong CW and SSB signals. The 455 kHz carrier insertion is provided by means of the BFO/CIO

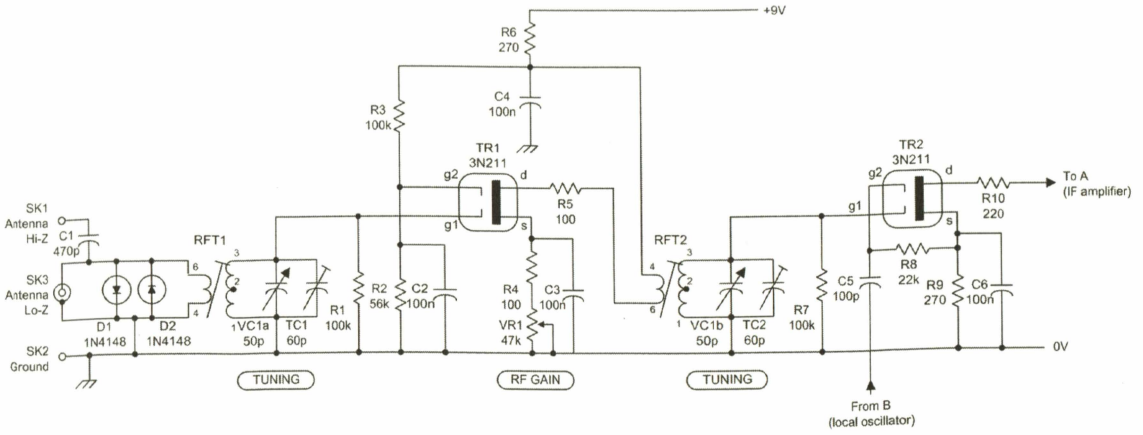

Figure 3.27 RF stages of the superhet receiver

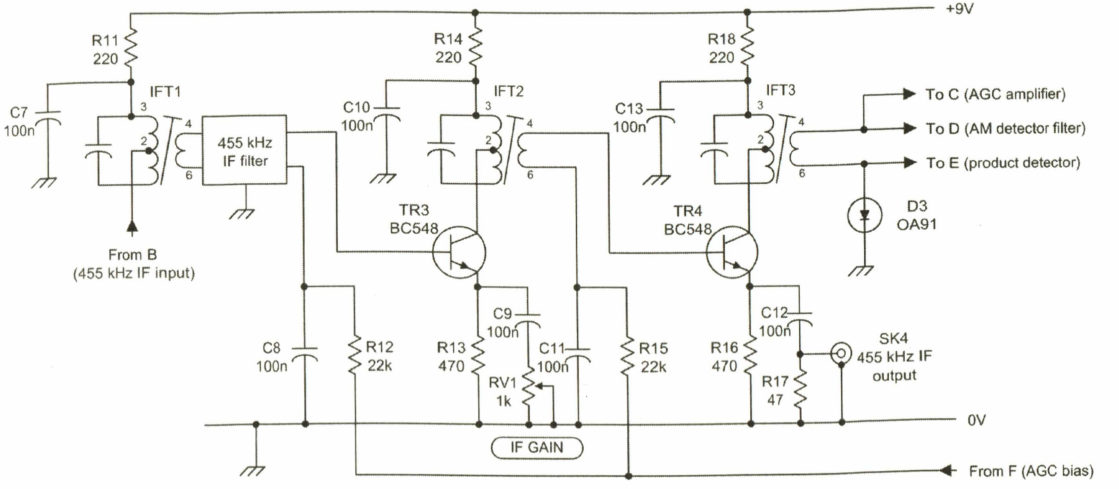

Figure 3.28 IF stages of the superhet receiver

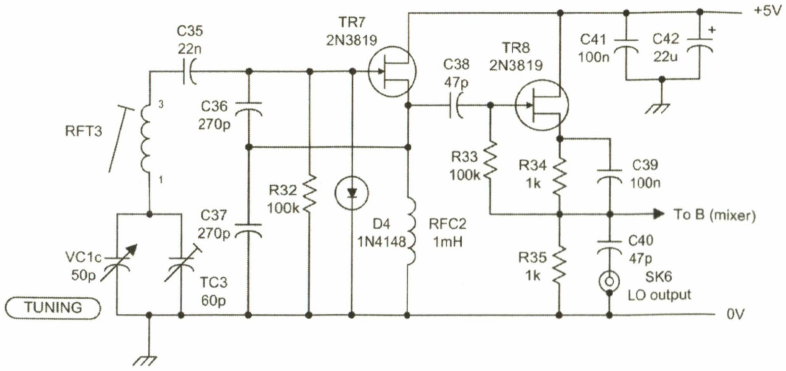

Figure 3.29 Local oscillator and buffer stages of the superhet receiver

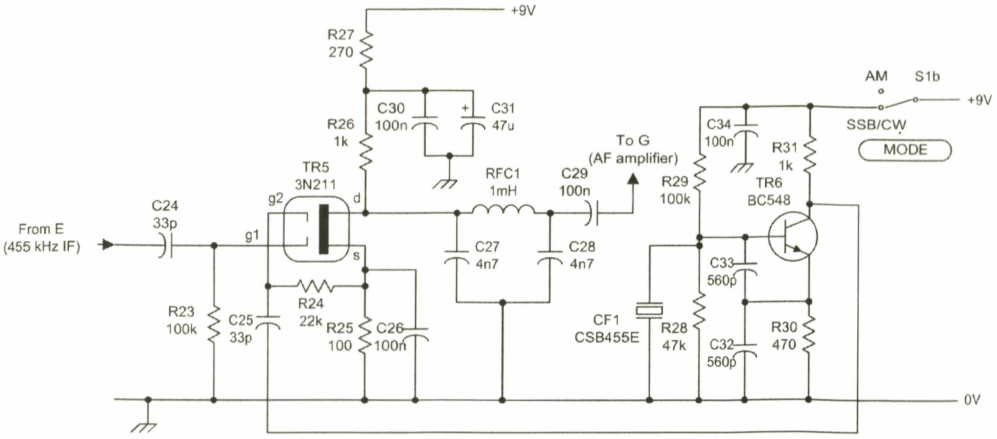

Figure 3.30 Product detector and BFO/CIO stages of the superhet receiver

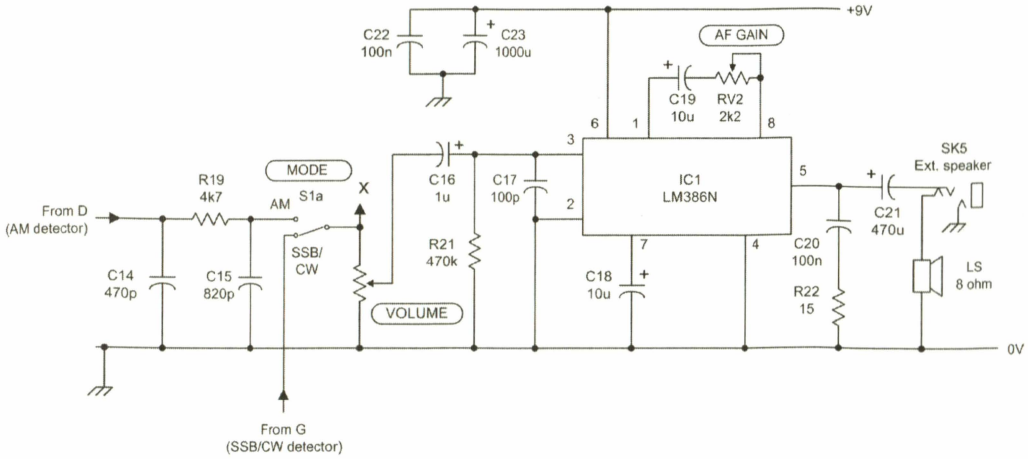

Figure 3.31 AF stages of the superhet receiver

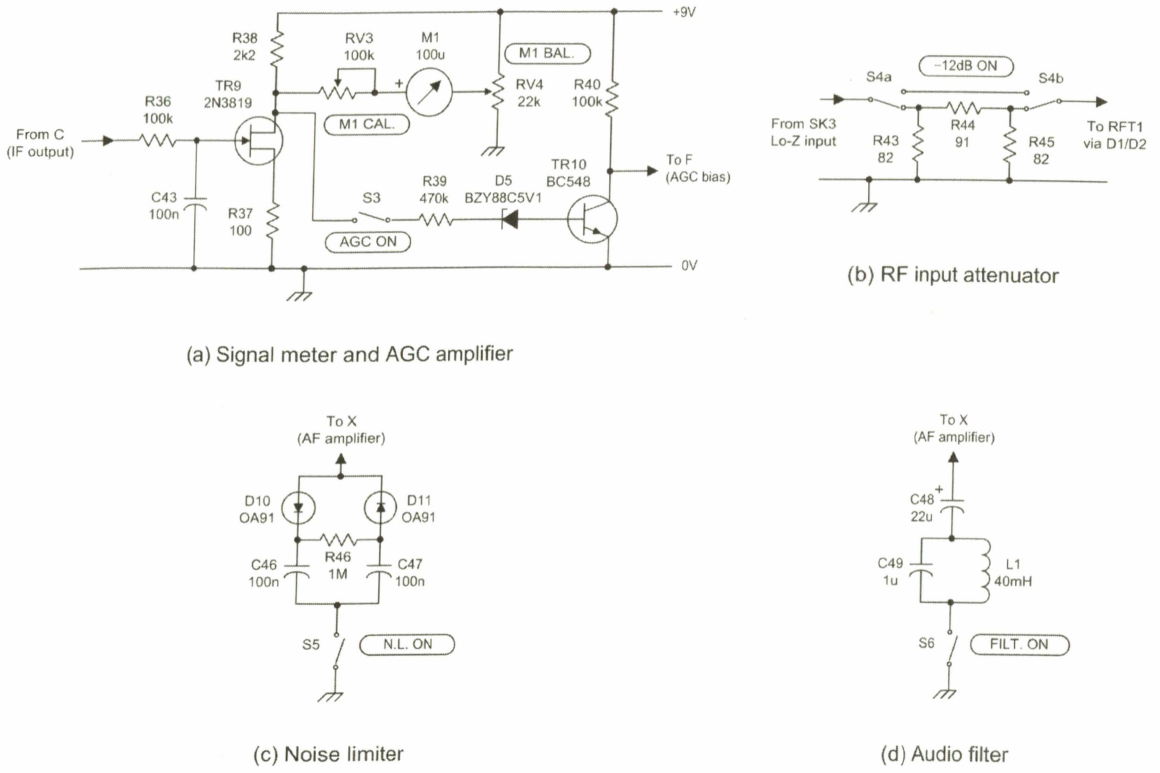

Figure 3.32 Signal meter, AGC, RF input attenuator, noise limiter and audio filter stages

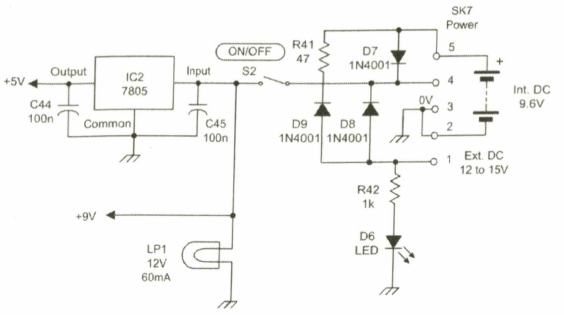

Figure 3.33 Power supply

stage (TR11). Amplified AGC is provided by means of TR9 and TR10.

A conventional integrated circuit audio amplifier stage (IC1) provides the audio gain necessary to drive a small loudspeaker. A 5 V regulator (IC2) is used to provide a stabilised low-voltage DC rail for the local oscillator and buffer stages. Diode switching is used to provide automatic changeover for the external DC or AC supplies. This circuitry also provides charging current for the internal nickel-cadmium (NiCd) battery pack.

3.13 Multiple choice questions

1. A receiver in which selected signals of any frequency are converted to a single frequency is called a:
   (a) wideband TRF
   (b) multi-channel receiver
   (c) superhet receiver.

2. Delayed AGC:
   (a) maintains receiver sensitivity for very small signals
   (b) increases receiver sensitivity for very large signals
   (c) has no effect on receiver sensitivity.

3. A receiver with a high IF will successfully reject:
   (a) the image frequency
   (b) the adjacent frequency
   (c) the local oscillator frequency.

4. An IF amplifier consists of several stages. These are normally coupled using:
   (a) resistor/capacitor coupling
   (b) pure resistor coupling
   (c) transformer coupling.

5. SSB filters have a typical bandwidth of:
   (a) less than 300 Hz
   (b) 3 kHz to 6 kHz
   (c) more than 10 kHz.

6. The output signal of a diode detector comprises the modulated waveform, a small ripple and a DC component. The DC component is:
   (a) independent of the carrier strength
   (b) proportional to the carrier strength
   (c) inversely proportional to the carrier strength.

7. What is the principal function of the RF stage in a superhet receiver?
   (a) To improve the sensitivity of the receiver
   (b) To reduce second channel interference
   (c) To reduce adjacent channel interference.

8. A receiver having an IF of 1.6 MHz is tuned to a frequency of 12.8 MHz. Which of the following signals could cause image channel interference?
   (a) 11.2 MHz
   (b) 14.5 MHz
   (c) 16.0 MHz.

9. In an FM transmitter, the modulating signal is applied to:
   (a) the final RF amplifier stage
   (b) the antenna coupling unit
   (c) the RF oscillator stage.

10. The response of two coupled tuned circuits appears to be 'double-humped'. This is a result of:
    (a) undercoupling
    (b) overcoupling
    (c) critical coupling.

11. A disadvantage of low-level amplitude modulation is the need for:
    (a) a high-power audio amplifier
    (b) a high-power RF amplifier
    (c) a linear RF power amplifier.

12. The function of an antenna coupling unit in a transmitter is:
    (a) to provide a good match between the RF power amplifier and the antenna
    (b) to increase the harmonic content of the radiated signal
    (c) the reduce the antenna SWR to zero.

13. In order to improve the stability of a local oscillator stage:
    (a) a separate buffer stage should be used
    (b) the output signal should be filtered
    (c) an IF filter should be used.

14. A dual conversion superhet receiver uses:
    (a) a low first IF and a high second IF
    (b) a high first IF and a low second IF
    (c) the same frequency for both first and second IF.

15. The majority of the gain in a superhet receiver is provided by:
    (a) the RF amplifier stage
    (b) the IF amplifier stage
    (c) the AF amplifier stage.

16. Image channel rejection in a superhet receiver is improved by:
    (a) using an IF filter
    (b) using a low IF
    (c) using a high IF.

Chapter 4 VHF communications

Very high frequency (VHF) radio has long been the primary means of communication between aircraft and the ground. The system operates in the frequency range extending from 118 MHz to 137 MHz and supports both voice and data communication (the latter becoming increasingly important). This chapter describes the equipment used and the different modes in which it operates.

VHF communication is used for various purposes including air traffic control (ATC), approach and departure information, transmission of meteorological information, ground handling of aircraft, company communications, and also for the Aircraft Communications and Reporting System (ACARS).

4.1 VHF range and propagation

In the VHF range (30 MHz to 300 MHz) radio waves usually propagate as direct line-of-sight (LOS) waves (see Chapter 1). Sky wave propagation still occurs at the bottom end of the VHF range (up to about 50 MHz depending upon solar activity) but at the frequencies used for aircraft communication, reflection from the ionosphere is exceptionally rare.

Communication by strict line-of-sight (LOS) paths, augmented on occasions by diffraction and reflection, imposes a limit on the working range that can be obtained. It should also be evident that the range will be dependent on the height of an aircraft above the ground; the greater this is the further the range will be.

The maximum line-of-sight (LOS) distance (see Figure 4.1) between an aircraft and a ground station, in nautical miles (nm), is given by the relationship:

$$d = 1.1\sqrt{h}$$

where h is the aircraft's altitude in feet above ground (assumed to be flat terrain).

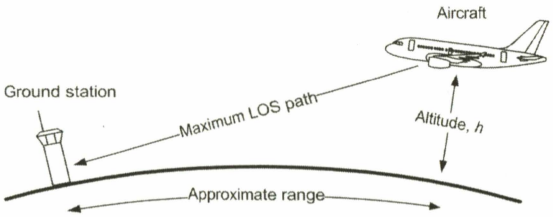

Figure 4.1 VHF line-of-sight range

Example 4.1

Determine the maximum line-of-sight distance when an aircraft is flying at a height of (a) 2,500 feet, and (b) 25,000 feet.

In (a), $h = 2{,}500$ hence:

$$d = 1.1\sqrt{2{,}500} = 1.1 \times 50 = 55 \text{ nm}$$

In (b), $h = 25{,}000$ hence:

$$d = 1.1\sqrt{25{,}000} = 1.1 \times 158 = 174 \text{ nm}$$

The actual range obtained depends not only on the LOS distance but also on several other factors, including aircraft position, transmitter power, and receiver sensitivity. However, the LOS distance usually provides a good approximation of the range that can be obtained between an aircraft and a ground station (see Table 4.1). The situation is slightly more complex when communication is from one aircraft to another; however, in such cases summing the two LOS distances will normally provide a guide as to the maximum range that can be expected.

Test your understanding 4.1

Determine the altitude of an aircraft that would provide a line-of-sight distance to a ground station located at a distance of 125 nm.

Table 4.1 Theoretical LOS range

Altitude (feet)	*Approx. LOS range (nm)*
100	10
1,000	32
5,000	70
10,000	100
20,000	141

4.2 DSB modulation

Amplitude modulation is used for voice communications as well as several of the **VHF data link** (VDL) modes. The system uses **double sideband** (DSB) modulation and, because this has implications for the bandwidth of modulated signals, it is worth spending a little time explaining how this works before we look at how the available space is divided into channels.

Figure 4.2 shows the frequency spectrum of an RF carrier wave at 124.575 MHz amplitude modulated by a single pure sinusoidal tone with a frequency of 1 kHz. Note how the amplitude modulated waveform comprises three separate components:

- an **RF carrier** at 124.575 MHz
- a **lower side frequency** (LSF) component at 124.574 MHz
- an **upper side frequency** (USF) component at 124.576 MHz.

Note how the LSF and USF are spaced away from the RF carrier by a frequency that is equal to that of the modulating signal (in this case 1 kHz). Note also from Figure 4.2 that the **bandwidth** (i.e. the range of frequencies occupied by the modulated signal) is *twice* the frequency of the modulating signal (i.e. 2 kHz).

Figure 4.3 shows an RF carrier modulated by a speech signal rather than a single sinusoidal tone. The **baseband** signal (i.e. the voice signal itself) typically occupies a frequency range extending from around 300 Hz to 3.4 kHz. Indeed, to improve intelligibility and reduce extraneous noise, the frequency response of the microphone and speech amplifier is invariable designed to

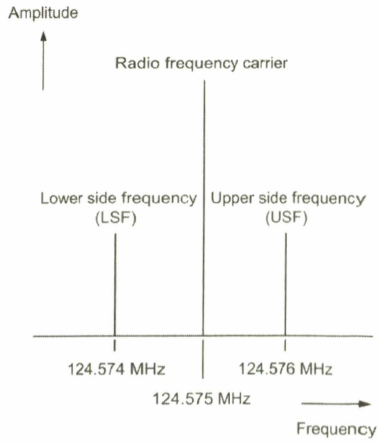

Figure 4.2 Frequency spectrum of an RF carrier using DSB modulation and a pure sinusoidal modulating signal

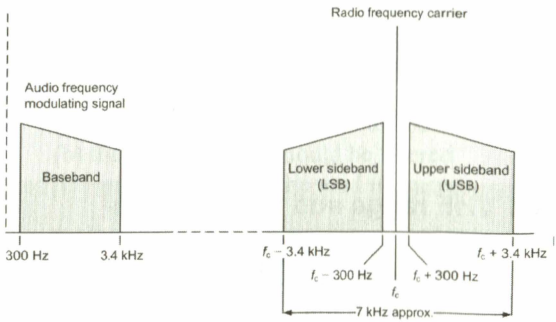

Figure 4.3 Frequency spectrum of a baseband voice signal (left) and the resulting DSB AM RF carrier (note that the bandwidth of the RF signal is approximately twice that of the highest modulating signal frequency)

select this particular range of frequencies and reject any audio signals that lie outside it. From Figure 4.3 it should be noted that the bandwidth of the RF signal is approximately 7 kHz (i.e. twice that of the highest modulating signal).

Test your understanding 4.2

Determine the RF signal frequency components present in a DSB amplitude modulated carrier wave at 118.975 MHz when the modulating signal comprises pure tones at 2 kHz and 5 kHz.

4.3 Channel spacing

VHF aircraft communications take place in a number of allocated channels. These channels were originally spaced at 200 kHz intervals throughout the VHF aircraft band. However, a relentless increase in air traffic coupled with the increasing use of avionic systems for data link communication has placed increasing demands on the available frequency spectrum. In response to this demand, the spacing between adjacent channels in the band 118 MHz to 137 MHz has been successively reduced so as to increase the number of channels available for VHF communication (see Table 4.2).

Figure 4.4 shows the channel spacing for the earlier 25 kHz and current European 8.33 kHz VHF systems. Note how the 8.33 kHz system of channel spacing allows three DSB AM signals to occupy the space that was previously occupied by a single signal.

The disadvantage of narrow channel spacing is that the **guard band** of unused spectrum that previously existed with the 25 kHz system is completely absent and that receivers must be designed so that they have a very high degree of **adjacent channel rejection** (see page 48). Steps must also be taken to ensure that the bandwidth of the transmitted signal does not exceed the 7 kHz, or so, bandwidth required for effective voice communication. The penalty for not restricting the bandwidth is that signals from one channel may 'spill over' into the adjacent channels, causing interference and degrading communication (see Figure 4.7).

Table 4.2 Increase in the number of available VHF channels

Date	*Frequency range*	*Channel spacing*	*Number of channels*
1947	118 MHz to 132 MHz	200 kHz	70
1958	118 MHz to 132 MHz	100 kHz	140
1959	118 MHz to 136 MHz	100 kHz	180
1964	118 MHz to 136 MHz	50 kHz	360
1972	118 MHz to 136 MHz	25 kHz	720
1979	118 MHz to 137 MHz	25 kHz	760
1995	118 MHz to 137 MHz	8.33 kHz	2280

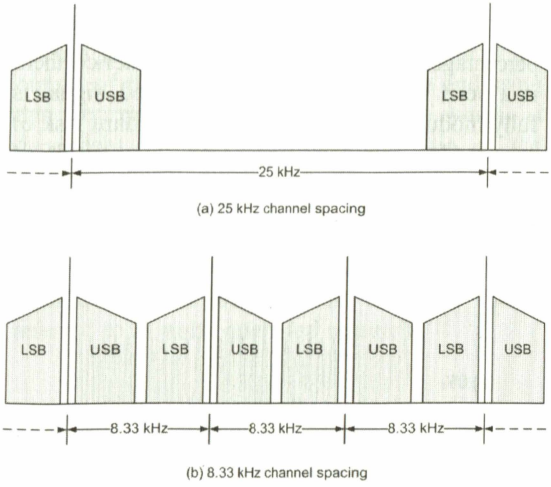

Figure 4.4 25 kHz and 8.33 kHz channel spacing

Test your understanding 4.3

How many channels at a spacing of 12.5 kHz can occupy the band extending from 118 MHz to 125 MHz?

Test your understanding 4.4

A total of 1520 data channels are to be accommodated in a band extending from 316 MHz to 335 MHz. What channel spacing must be used and what range of frequencies can the baseband signal have?

4.4 Depth of modulation

The depth of modulation of an RF carrier wave is usually expressed in terms of **percentage modulation**, as shown in Figure 4.6. Note that the level of modulation can vary between 0% (corresponding to a completely unmodulated carrier) to 100% (corresponding to a fully modulated carrier).

In practice, the intelligibility of a signal (i.e. the ability to recover information from a weak signal that may be adversely affected by noise

and other disturbances) increases as the percentage modulation increases and hence there is a need to ensure that a transmitted signal is fully modulated but without the attendant risk of over-modulation (see Fig. 4.6). The result of over-modulation is excessive bandwidth, or 'splatter', causing adjacent channel interference, as shown in Fig. 4.7.

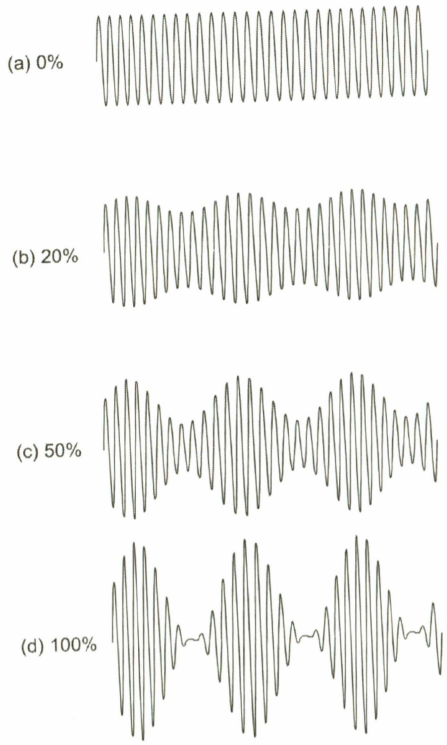

Figure 4.5 Different modulation depths

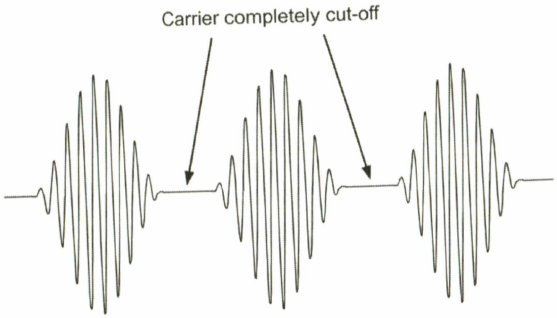

Figure 4.6 Over-modulation

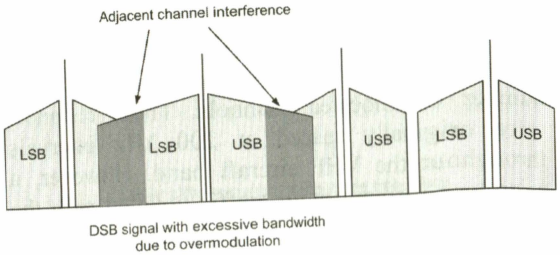

Figure 4.7 Adjacent channel interference caused by overmodulation

4.5 Compression

In order to improve the intelligibility of VHF voice communications, the speech amplifier stage of an aircraft VHF radio is invariably fitted with a **compressor** stage. This stage provides high gain for low amplitude signals and reduced gain for high amplitude signals. The result is an increase in the average modulation depth (see Figure 4.8).

Figure 4.9 shows typical speech amplifier characteristics with and without compression. Note that most aircraft VHF radio equipment provides adjustment both for the level of modulation and for the amount of compression that is applied (see Figure 4.10).

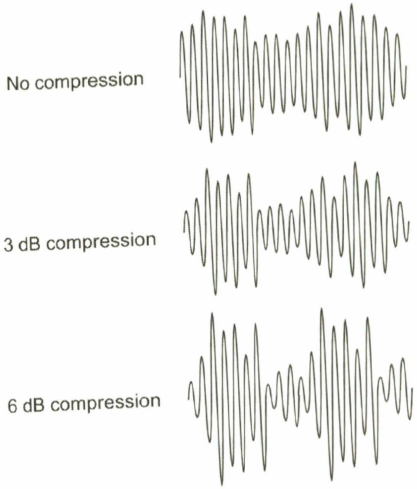

Figure 4.8 Modulated RF carrier showing different amounts of compression applied to the modulating signal

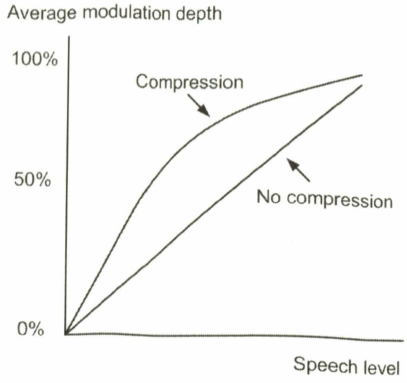

Figure 4.9 Effect of compression on average modulation depth

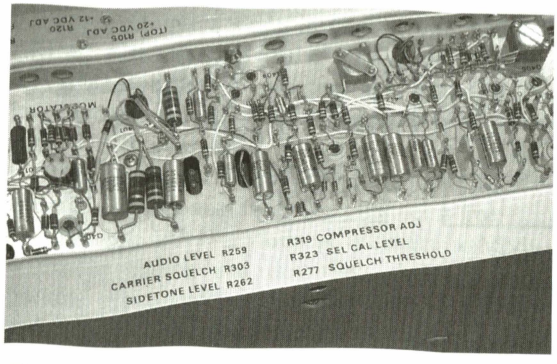

Figure 4.10 VHF radio adjustment points

4.6 Squelch

Aircraft VHF receivers invariably incorporate a system of muting the receiver audio stages in the absence of an incoming signal. This system is designed to eliminate the annoying and distracting background noise that is present when no signals are being received. Such systems are referred to as **squelch** and the threshold at which this operates is adjusted (see Figure 4.10) so that the squelch 'opens' for a weak signal but 'closes' when no signal is present.

Two quite different squelch systems are used but the most common (and easy to implement) system responds to the amplitude of the received carrier and is known as **carrier operated squelch**. The voltage used to inhibit the receiver audio can be derived from the receiver's AGC system and fed to the squelch gate (Figure 4.11).

The alternative (and somewhat superior) squelch system involves sensing the noise present at the output of the receiver's detector stage and using this to develop a control signal which is dependent on the signal-to-noise ratio of the received signal rather than its amplitude. This latter technique, which not only offers better sensitivity but is also less prone to triggering from general background noise and off-channel signals, is often found in FM receivers and is referred to as **noise operated squelch**.

4.7 Data modes

Modern aircraft VHF communications equipment supports both data communication as well as voice communication. The system used for the aircraft data link is known as Aircraft Communications Addressing and Reporting System (ACARS). Currently, aircraft are equipped with three VHF radios, two of which are used for ATC voice communications and one is used for the ACARS data link (also referred to as **airline operational control** communications).

A data link terminal on board the aircraft (see Figure 4.12) generates **downlink** messages and processes **uplink** messages received via the VHF data link. The downlink and uplink ACARS messages are encoded as plain ASCII text. In the Unites States, the ACARS ground stations are operated by ARINC whilst in Europe, Asia and Latin America, the equivalent service is provided by SITA.

Initially each VHF ACARS provider was allocated a single VHF channel. However, as the use of VHF data links (VDL) has grown, the number of channels used in the vicinity of the busiest airports has increased to as many as four and these are often operating at full capacity.

Unfortunately, due to the pressure for additional voice channels, it has not been possible to assign a number of additional VHF channels for ACARS data link operation. As a result, several new data modes have recently been introduced that support higher data rates and make more efficient use of each 25 kHz channel currently assigned for data link purposes.

In addition, the FAA is developing a system that will permit the integration of ATC voice and

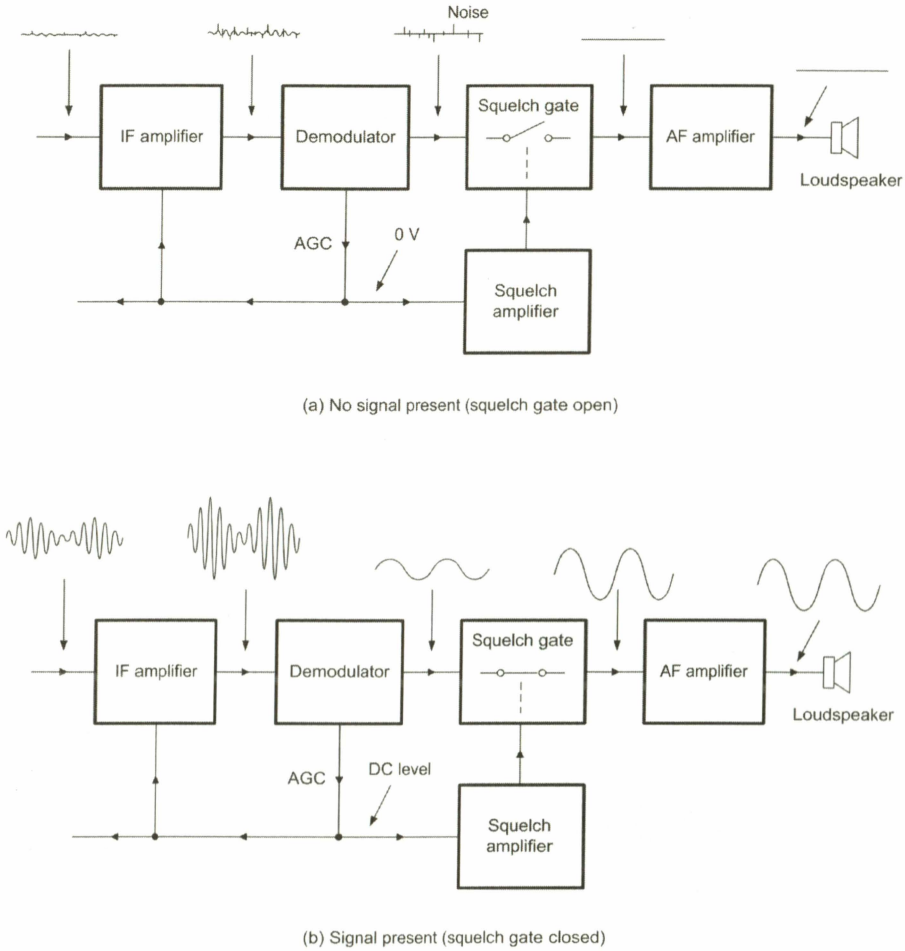

Figure 4.11 Action of the squelch system

data communications. This system uses digitally encoded audio rather than conventional analogue voice signals.

When operating in **VDL Mode 0**, the required data link protocols are implemented in the ACARS **management unit** (see Figure 4.11). Data is transferred from the VHF radio to the management unit at a rate of 2400 bits per second (bps) by means of **frequency shift keying** (FSK). The FSK audio signal consists of two sinusoidal tones, one at a 1.2 kHz and one at 2.4 kHz depending on whether the polarity of the information bit being transmitted is the same as that of the previous bit or is different. Note that the phase of the tones varies linearly and that there is no phase change on the transition between the two tones.

This type of modulation (in which the frequency spacing between the two audio tones is exactly half the data rate) is highly efficient in terms of bandwidth and is thus referred to as **minimum shift keying** (MSK). When data is transmitted, the MSK signal is used to modulate the amplitude of the VHF carrier (in much the same was as the voice signal). The resultant transmitted signal is then a double side-band (DSB) AM signal whose amplitude is modulated at 2400 bps. The RF carrier is then said to use DSB AM MSK modulation.

VHF carrier frequency selection and transmit/

Table 4.3 Summary of voice and data modes

Mode	*Modulation*	*Channel spacing*	*Access method*	*Data rate*	*Type of traffic*	*Radio interface*
Voice	DSB AM	25/8.33 kHz	PTT	Not applicable	Voice	Analogue
Data (Mode 0)	DSB AM MSK	25 kHz	CSMA	2,400 bps	ACARS	Analogue
Data (Mode A)	DSB AM MSK	25 kHz	CSMA	2,400 bps	ACARS	ARINC 429
Data (Mode 2)	D8PSK	25 kHz	CSMA	31,500 bps	ACARS and ATN	ARINC 429

receive control is provided by the ACARS management unit working in conjunction with an ARINC 429 interface to the VHF radio (Figure 4.12). The channel access protocol employed is known as **carrier sense multiple access** (CSMA). It consists of listening for activity on the channel (i.e. transmissions from other users) and transmitting only when the channel is free.

Operation in **VDL Mode A** is similar to Mode 0 except uplink and downlink ACARS data packets are transferred between the VHF radio and the ACARS management unit via a transmit/receive pair of 100 kbps ARINC 429 digital interfaces rather than the analogue audio interface used by Mode 0. The digital data is then used by the VHF radio to modulate the RF carrier at a rate of 2400 bps using the same DSB AM MSK modulation scheme used by VDL Mode 0.

Another difference between VDL Mode 0 and VDL Mode A is that, when using the latter, the VHF radio controls when to access the channel to transmit data using the same CSMA protocol employed by the management unit in VDL Mode 0. However, the selection of the frequency to be used is still controlled by the CMU or ATSU by means of commands issued via the same ARINC 429 interface used for data transfer. Note that, as far as the VHF data link ground stations are concerned, there is no difference in the air/ground VDL Mode 0 or VDL Mode A transmissions.

Operation in **VDL Mode 2** is based on an improved set of data transfer protocols and, as a result, it provides a significant increase in data capacity. VDL Mode 2 has been designed to provide for the future migration of VDL to the aeronautical telecommunications network (ATN). This network will permit more efficient and seamless delivery of data messages and data files between aircraft and the ground computer systems used by airlines and air traffic control facilities.

ATN will be supported by a number of air/ground networks and ground/ground networks. The air/ground and ground/ground networks will be interconnected by means of ATN **routers** that implement the required protocols and will operate in much the same way as the Internet with which you are probably already familiar.

VDL Mode 2 employs a data rate of 31,500 bits per second over the air/ground link using a single 25 kHz channel. The increased utilization of the 25 kHz channel is achieved by employing a system of modulation that is more efficient in terms of its use of bandwidth. This system is known as **differential eight phase shift keying** (D8PSK). In this system, an audio carrier signal is modulated be means of shift in phase that can take one of eight possible phases; 0°, 45°, 90°, 135°, 180°, 225°, 270° or 315°. These phase changes correspond to three bits of digital data as follows: 000, 001, 011, 010, 110, 111, 101, or 100. The D8PSK modulator uses the bits in the data message, in groups of three, to determine the carrier phase change at a rate of 10.5 kHz. Consequently, the bit rate will be three times this value, or 31.5 kbps. D8PSK modulation of the phase of the VHF carrier is accomplished using a **quadrature modulator**. Note that, in D8PSK modulation, groups of three bits are often referred to as **D8PSK symbols**.

VDL Mode 3 offers an alternative to the European solution of reducing the channel spacing to 8.33 kHz. VDL Mode 3 takes a 25 kHz frequency assignment and divides it into 120 ms frames with four 30 ms time slots (each of which constitutes a different channel). Thus Mode 3 employs **time division multiplexing** (TDM) rather than **frequency division multiplexing** (FDM) used in the European system. Note that VDL Mode 3 is the only planned VDL mode that is designed to support voice and data traffic *on the same frequency*.

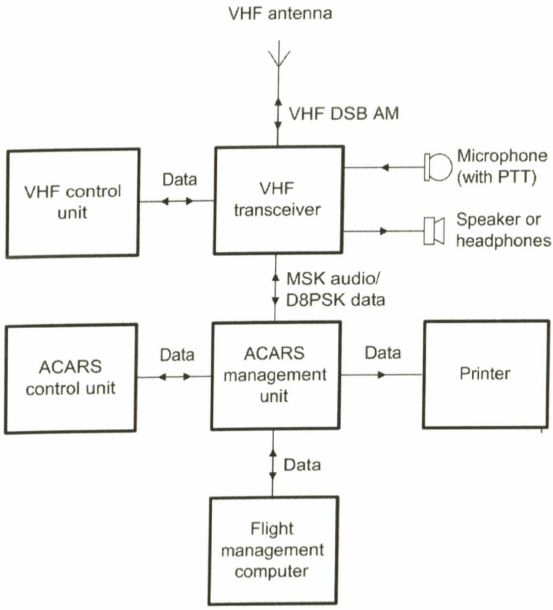

Figure 4.13 VHF radio data management

4.8 ACARS

ACARS (Aircraft Communication Addressing and Reporting System) is a digital data link system transmitted in the VHF range (118 MHz to 136 MHz). ACARS provides a means by which aircraft operators can exchange data with an aircraft without human intervention. This makes it possible for an airline to communicate with the aircraft in their fleet in much the same way as it is possible to exchange data using a land-based digital network. ACARS uses an aircraft's unique identifier and the system has some features that are similar to those currently used for electronic mail.

The ACARS system was originally specified in the ARINC 597 standard but has been revised as ARINC 724B. A significant feature of ACARS is the ability to provide real-time data on the ground relating to aircraft performance; this has made it possible to identify and plan aircraft maintenance activities.

ACARS communications are automatically directed through a series of ground-based ARINC (Aeronautical Radio Inc.) computers to the relevant aircraft operator. The system helps to reduce the need for mundane HF and VHF voice messages and provides a system which can be logged and tracked. Typical ACARS messages are used to convey routine information such as:

- passenger loads
- departure reports
- arrival reports
- fuel data
- engine performance data.

This information can be requested by the company and retrieved from the aircraft at periodic intervals or on demand. Prior to ACARS this type of information would have been transferred via VHF voice.

ACARS uses a variety of hardware and software components including those that are installed on the ground and those that are present

```
ACARS mode: E Aircraft reg: N27015
Message label: H1 Block id: 3
Msg no: C36C
Flight id: CO0004
Message content:-
#CFBBY ATTITUDE INDICATOR
MSG 2820121 A 0051 06SEP06 CL H PL
DB FUEL QUANTITY PROCESSOR UNIT
MSG 3180141 A 0024 06SEP06 TA I 23
PL
DB DISPLAYS-2 IN LEFT AIMS
MSG 2394201 A 0005 06SEP06 ES H PL
MSG 2717018
```

Figure 4.14 Example of a downlink ACARS message sent from a Boeing 777 aircraft

in the aircraft. The aircraft ACARS components include a **management unit** (see Figure 4.12) which deals with the reception and transmission of messages via the VHF radio transceiver, and the **control unit** which provides the crew interface and consists of a display screen and printer. The ACARS **ground network** comprises the ARINC ACARS remote transmitting/receiving stations and a network of computers and switching systems. The ACARS **command, control and management subsystem** consists of the ground-based airline operations and associated functions including operations control, maintenance and crew scheduling.

There are two types of ACARS messages; **downlink** messages that originate from the aircraft and **uplink** messages that originate from ground stations (see Figures 4.14 to 4.17). Frequencies used for the transmission and reception of ACARS messages are in the band extending from 129 MHz to 137 MHz (VHF) as shown in Table 4.4. Note that different channels are used in different parts of the world. A typical ACARS message (see Figure 4.14) consists of:

- mode identifier (e.g. 2)
- aircraft identifier (e.g. G-DBCC)
- message label (e.g. 5U—a weather request)
- block identifier (e.g. 4)
- message number (e.g. M55A)
- flight number (e.g. BD01NZ)
- message content (see Figure 4.14).

Table 4.4 ACARS channels

Frequency	*ACARS service*
129.125 MHz	USA and Canada (additional)
130.025 MHz	USA and Canada (secondary)
130.450 MHz	USA and Canada (additional)
131.125 MHz	USA (additional)
131.475 MHz	Japan (primary)
131.525 MHz	Europe (secondary)
131.550 MHz	USA, Canada, Australia (primary)
131.725 MHz	Europe (primary)
136.900 MHz	Europe (additional)

```
ACARS mode: 2
Aircraft reg: G-DBCC
Message label: 5U
Block id: 4
Msg no: M55A
Flight id: BD01NZ
Message content:-
01 WXRQ 01NZ/05 EGLL/EBBR .G-DBCC
/TYP 4/STA EBBR/STA EBOS/STA EBCI
```

Figure 4.14 Example of an ACARS message (see text)

```
ACARS mode: 2 Aircraft reg: N788UA
Message label: RA Block id: L
Msg. no: QUHD
Flight id: QWDUA~
Message content:-
WEIGHT MANIFEST
UA930 SFOLHR
SFO
ZFW     383485
TOG     559485
MAC     40.1
TRIM    02.8
PSGRS   285
```

Figure 4.15 Example of aircraft transmitted data (in this case, a weight manifest)

```
ACARS mode: X Aircraft reg: N199XX
Message label: H1 Block id: 7
Msg no: F00M
Flight id: GS0000
Message content:-
#CFBER FAULT/WRG [SWPA2]
INTERFACE
TCAS FAIL ADVISORY
TERRAIN 1 FAIL ADVISORY
TERRAIN 1-2 FAIL ADVISORY
THROTTLE QUADRANT 1-2 FAIL ADVISORY
22-10 221009ATA1 OC=1
TQA FAULT [ATA1]
INTERFACE
22-10 221009ATA
```

Figure 4.16 Example of a failure advisory message transmitted from an aircraft

```
ACARS mode: R Aircraft reg: G-EUPR
Message label: 10 Block id: 8
Msg no: M06A
Flight id: BA018Z
Message content:-
FTX01.ABZKOBA
BA1304
WE NEED ENGINEERING TO DO PDC ON
NUMBER 2 IDG
CHEERS
ETL 0740 GMT
```

Figure 4.17 Example of a plain text message sent via ACARS

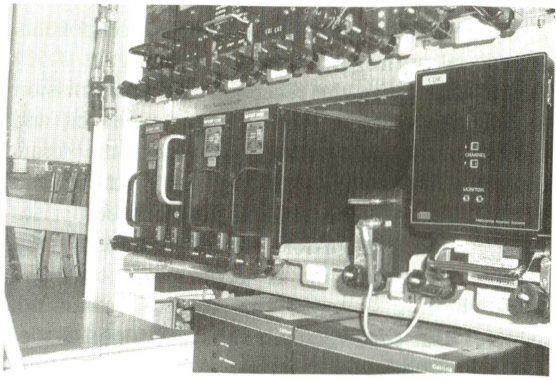

Figure 4.18 Three VHF radios (on the extreme left) installed in the aircraft's avionic equipment bay

Test your understanding 4.5

Explain the need for (a) speech compression and (b) squelch in an aircraft VHF radio.

Test your understanding 4.6

Explain, with the aid of a block diagram, how data transfer is possible using an aircraft VHF radio.

Test your understanding 4.7

Explain the difference between MSK and D8PSK modulation. Why is the latter superior?

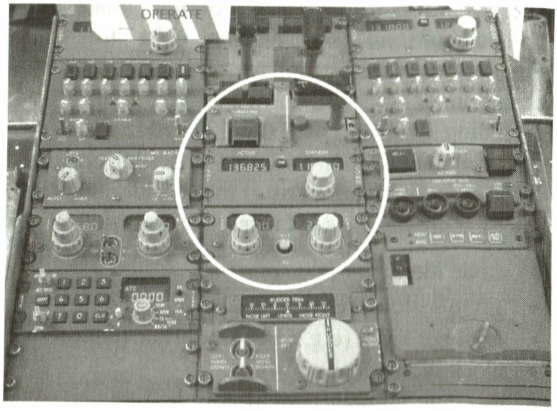

Figure 4.19 VHF communications frequency selection panel (immediately above the ILS panel)

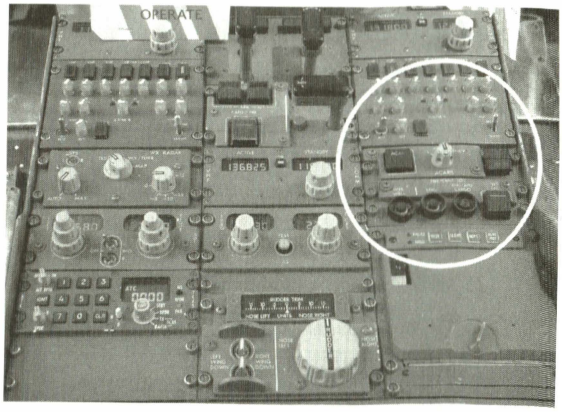

Figure 4.20 ACARS control panel (immediately to the right of the VHF communications frequency selection panel)

4.9 VHF radio equipment

The typical specification of a modern aircraft VHF data radio is shown in Table 4.5. This radio can be used with analogue voice as well as data in Modes 0, A and 2 (see page 65). Figures 4.18 to 4.20 show typical equipment and control locations in a passenger aircraft whilst Figures 4.21 to 4.24 show internal and external views of a typical VHF radio. Finally, Figure 4.25 shows a typical VHF quarter-wave blade antenna fitted to an Airbus A380 aircraft.

Figure 4.21 Aircraft VHF radio removed from its rack mounting

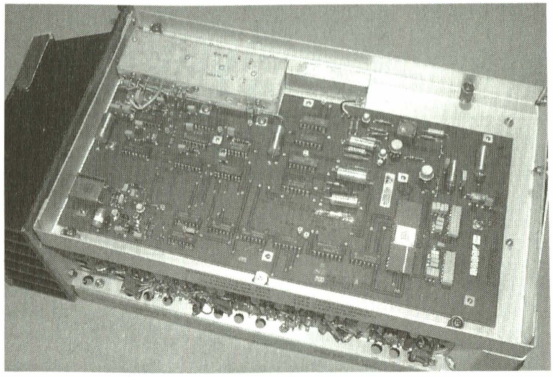

Figure 4.22 Digital frequency synthesiser stages of the VHF radio. The quartz crystal controlled reference oscillator is at the bottom left corner and the frequency divider chain runs from left to right with the screened VCO at the top

Table 4.5 Aircraft VHF radio specifications

Parameter	*Specification*
Frequency range	118.00 MHz to 136.99167 MHz
Channel spacing	8.33 kHz or 25 kHz
Operating modes	Analogue voice (ARINC 716); Analogue data 2400 bps AM MSK ACARS (external modem); ARINC 750 Mode A analogue data 2400 bps AM MSK ACARS; Mode 2 data 31.5 kbps D8PSK
Sensitivity	2 μV for 6 dB (S+N)/N
Selectivity (25 kHz channels)	6 dB max. attenuation at ±16 kHz 60 dB min. attenuation at ±34 kHz
Selectivity (8.33 kHz channels)	6 dB max. attenuation at ± 5.5 kHz 60 dB min. attenuation at ±14.7 kHz
Audio power output	Adjustable from less than 50 μW to 50 m into 600 Ω ± 20%
RF output power	25 W min. DSB AM operation 18 W min. D8PSK operation
Frequency stability	±0.005%
Modulation level	0.25 V RMS input at 1 kHz will modulate the transmitter at least 90%
Speech processing	Greater than 20 dB of compression
Mean time between failure	Greater than 40,000 hours

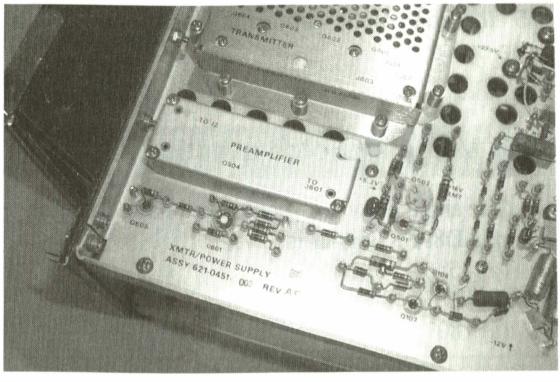

Figure 4.23 Screened receiver pre-amplifier and transmitter power amplifier stages (top)

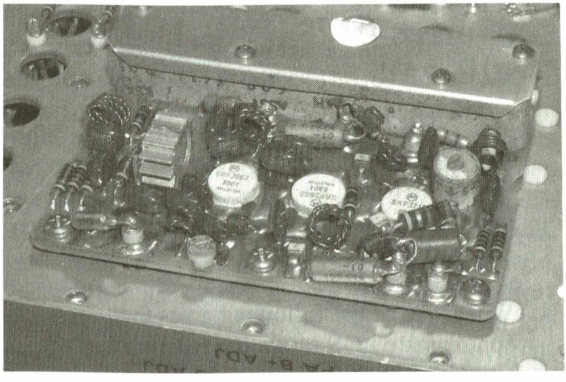

Figure 4.24 RF power amplifier stages with the screening removed. There are three linear power stages and one driver (left)

Figure 4.25 The forward quarter-wave VHF blade antenna on the Airbus A380 (see page 15 for the VHF antenna locations on a Boeing 757)

4.10 Multiple choice questions

1. The angle between successive phase changes of a D8PSK signal is:
   (a) 45°
   (b) 90°
   (a) 180°.

2. The method of modulation currently employed for aircraft VHF voice communication is:
   (a) MSK
   (b) D8PSK
   (c) DSB AM.

3. The channel spacing currently used in Europe for aircraft VHF voice communication is:
   (a) 8.33 kHz and 25 kHz
   (b) 12.5 kHz and 25 kHz
   (c) 25 kHz and 50 kHz.

4. Which one of the following gives the approximate LOS range for an aircraft at an altitude of 15,000 feet?
   (a) 74 nm
   (b) 96 nm
   (c) 125 nm

5. The function of the compressor stage in an aircraft VHF radio is:
   (a) to reduce the average level of modulation
   (b) to increase the average level of modulation
   (c) to produce 100% modulation at all times.

6. The function of the squelch stage in an aircraft VHF radio is:
   (a) to eliminate noise when no signal is received
   (b) to increase the sensitivity of the receiver for weak signals
   (c) to remove unwanted adjacent channel interference.

7. Large passenger aircraft normally carry:
   (a) two VHF radios
   (b) three VHF radios
   (c) four VHF radios.

8. The typical bandwidth of a DSB AM voice signal is:
   (a) 3.4 kHz
   (b) 7 kHz
   (c) 25 kHz.

9. The disadvantage of narrow channel spacing is:
   (a) the need for increased receiver sensitivity
   (b) the possibility of adjacent channel interference
   (c) large amounts of wasted space between channels.

10. The standard for ACARS is defined in:
    (a) ARINC 429
    (b) ARINC 573
    (c) ARINC 724.

11. The frequency band currently used in Europe for aircraft VHF voice communication is:
    (a) 88 MHz to 108 MHz
    (b) 108 MHz to 134 MHz
    (c) 118 MHz to 137 MHz.

12. The typical output power of an aircraft VHF radio using voice mode is:
    (a) 25 W
    (b) 150 W
    (c) 300 W.

Chapter 5 HF communications

High frequency (HF) radio provides aircraft with an effective means of communication over long distance oceanic and trans-polar routes. In addition, global data communication has recently been made possible using strategically located HF data link (HFDL) ground stations. These provide access to ARINC and SITA airline networks. HF communication is thus no longer restricted to voice and is undergoing a resurgence of interest due to the need to find a means of long distance data communication that will augment existing VHF and SATCOM data links.

An aircraft HF radio system operates on spot frequencies within the HF spectrum. Unlike aircraft VHF radio, the spectrum is not divided into a large number of contiguous channels but aircraft allocations are interspersed with many other services, including short wave broadcasting, fixed point-to-point, marine and land-mobile, government and amateur services. This chapter describes the equipment used and the different modes in which it operates.

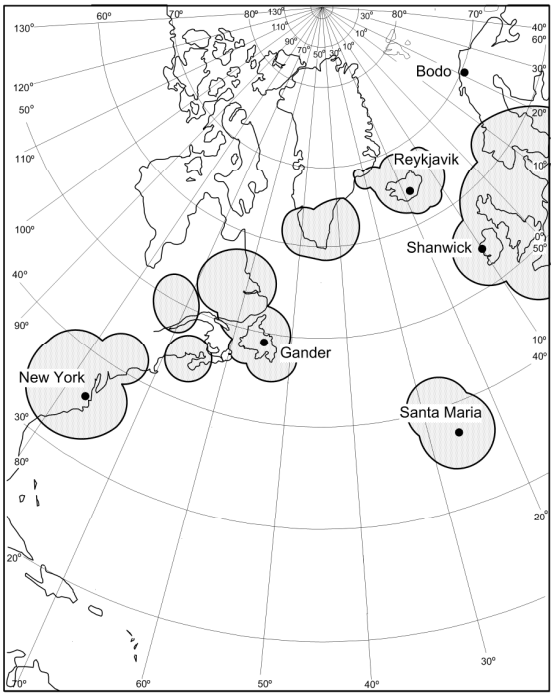

Figure 5.1 VHF aircraft coverage in the North Atlantic area

5.1 HF range and propagation

In the HF range (3 MHz to 30 MHz) radio waves propagate over long distances due to reflection from the ionised layers in the upper atmosphere. Due to variations in height and intensities of the ionised regions, different frequencies must be used at different times of day and night and for different paths. There is also some seasonal variation (particularly between winter and summer). Propagation may also be disturbed and enhanced during periods of intense solar activity. The upshot of this is that HF propagation has considerable vagaries and is far less predictable than propagation at VHF.

Frequencies chosen for a particular radio path are usually set roughly mid-way between the lowest usable frequency (LUF) and the maximum usable frequency (MUF). The daytime LUF is usually between 4 to 6 MHz during the day, falling rapidly after sunset to around 2 MHz. The MUF is dependent on the season and sunspot cycle but is often between 8 MHz and 20 MHz. Hence a typical daytime frequency for aircraft communication might be 8 MHz whilst this might be as low as 3 MHz during the night. Typical ranges are in the region of 500 km to 2500 km and this effectively fills in the gap in VHF coverage (see Figure 5.1).

As an example of the need to change frequencies during a 24-hour period, Figure 5.2

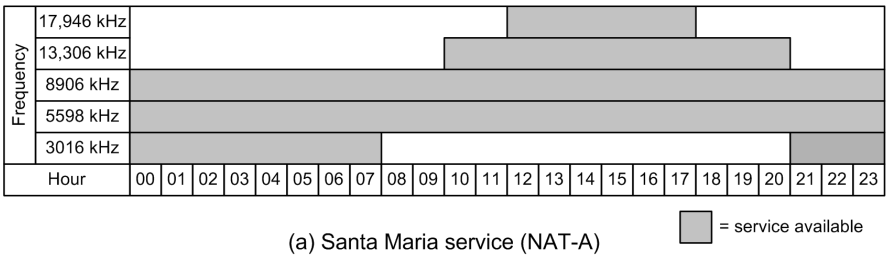

(a) Santa Maria service (NAT-A)

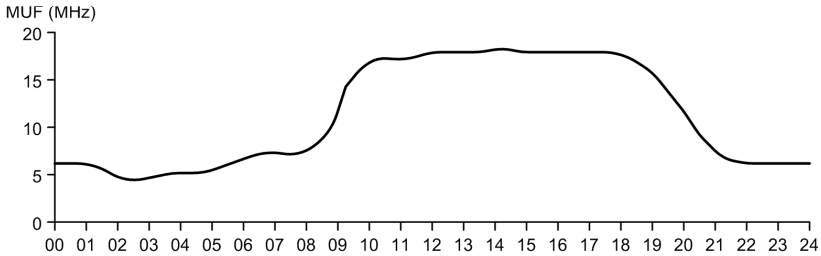

(b) Variation of MUF (Madrid–New York)

Figure 5.2 Santa Maria oceanic service (NAT-A) showing operational frequencies and times together with typical variation of MUF for a path from Madrid to New York

shows how the service provided by the Santa Maria HF oceanic service makes use of different parts of the HF spectrum at different times of the day and night. Note the correlation between the service availability chart shown in Figure 5.2(a) and the typical variation in maximum usable frequency (MUF) for the radio path between Madrid and New York.

The following HF bands are allocated to the aeronautical service:

- 2850 to 3155 kHz
- 3400 to 3500 kHz
- 4650 to 4750 kHz
- 5480 to 5730 kHz
- 6525 to 6765 kHz
- 8815 to 9040 kHz
- 10,005 to 10,100 kHz
- 11,175 to 11,400 kHz
- 13,200 to 13,360 kHz
- 15,010 to 15,100 kHz
- 17,900 to 18,030 kHz
- 21,870 to 22,000 kHz
- 23,200 to 23,350 kHz.

5.2 SSB modulation

Unfortunately, the spectrum available for aircraft communications at HF is extremely limited. As a result, steps are taken to restrict the bandwidth of transmitted signals, for both voice and data. **Double sideband** (DSB) amplitude modulation requires a bandwidth of at least 7 kHz but this can be reduced by transmitting only one of the two sidebands. Note that either the **upper sideband** (USB) or the **lower sideband** (LSB) can be used because they both contain the same modulating signal information. In addition, it is possible to reduce (or 'suppress') the carrier as this, in itself, does not convey any information.

In order to demodulate a signal transmitted without a carrier it is necessary to reinsert the carrier at the receiving end (this is done in the demodulator stage where a beat frequency oscillator or **carrier insertion oscillator** replaces the missing carrier signal at the final intermediate frequency—see Figure 5.9). The absence of the carrier means that less power is wasted in the transmitter which consequently operates at significantly higher efficiency.

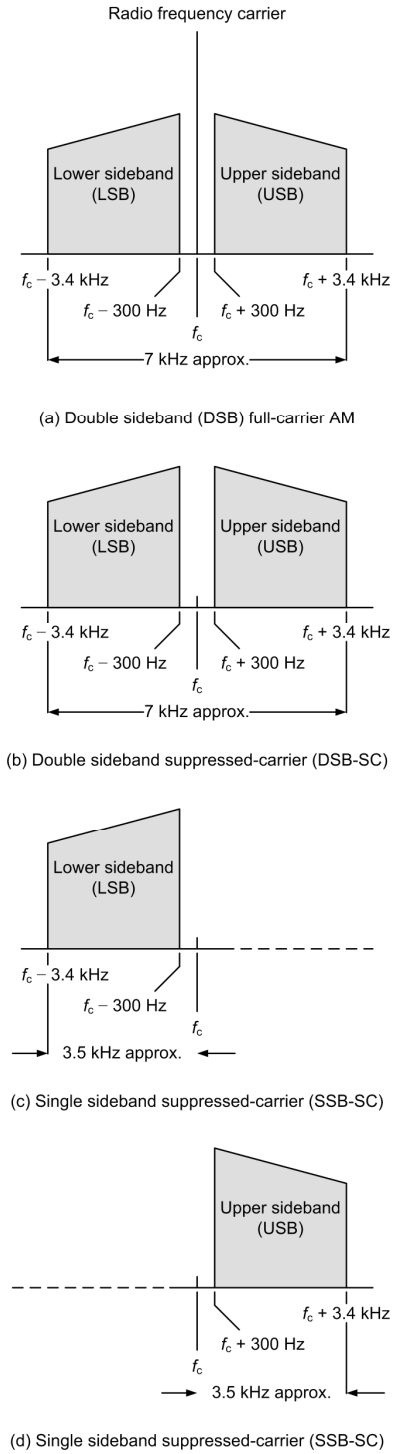

Figure 5.3 Frequency spectrum of an RF carrier using DSB and SSB modulation

Figure 5.3 shows the frequency spectrum of an RF signal using different types of amplitude modulation, with and without a carrier.

In Figure 5.3(a) the mode of transmission is conventional **double sideband** (DSB) amplitude modulation with full-carrier. This form of modulation is used for VHF aircraft communications and was described earlier in Chapter 4.

Figure 5.3(b) shows the effect of suppressing the carrier. This type of modulation is known as **double sideband suppressed-carrier** (DSB-SC). In practical DSB-SC systems the level of the carrier is typically reduced by 30 dB, or more. The DSB-SC signal has the same overall bandwidth as the DSB full-carrier signal but the reduction in carrier results in improved efficiency as well as reduced susceptibility to heterodyne interference.

Figure 5.3(c) shows the effect of removing both the carrier and the upper sideband. The resulting signal is referred to as **single sideband** (SSB), in this case using only the **lower sideband** (LSB). Note how the overall bandwidth has been reduced to only around 3.5 kHz, i.e. half that of the comparable DSB AM signal shown in Figure 5.3(a).

Finally, Figure 5.3(d) shows the effect of removing the carrier and the lower sideband. Once again, the resulting signal is referred to as single sideband (SSB), but in this case we are using only the **upper sideband** (USB). Here again, the overall bandwidth has been reduced to around 3.5 kHz. Note that aircraft HF communication requires the use of the upper sideband (USB). DSB AM may also be available but is now very rarely used due to the superior performance offered by SSB.

Test your understanding 5.1

1. Explain why HF radio is used on trans-oceanic routes.
2. Explain why different frequencies are used for HF aircraft communications during the day and at night.
3. State TWO advantages of using SSB modulation for aircraft HF communications.

5.3 SELCAL

Selective calling (SELCAL) reduces the burden on the flight crew by alerting them to the need to respond to incoming messages. SELCAL is available at HF and VHF but the system is more used on HF. This is partly due to the intermittent nature of voice communications on long oceanic routes and partly due to the fact that squelch systems are more difficult to operate when using SSB because there is no transmitted carrier to indicate that a signal is present on the channel.

The aircraft SELCAL system is defined in Annex 10 to the Convention on International Civil Aviation (ICAO), Volume 1, 4th edition of 1985 (amended 1987). The system involves the transmission of a short burst of audio tones.

Each transmitted code comprises two consecutive tone pulses, with each pulse containing two simultaneously transmitted tones. The pulses are of 1 second duration separated by an interval of about 0.2 seconds. To ensure proper operation of the SELCAL decoder, the frequency of the transmitted tones must be held to an accuracy of better than ± 0.15%.

SELCAL codes are uniquely allocated to particular aircraft by Air Traffic Control (ATC). As an example, a typical transmitted SELCAL code might consist of a 1 second burst of 312.6 Hz and 977.2 Hz followed by a pause of about 0.2 seconds and a further 1 second burst of tone comprising 346.7 Hz and 977.2 Hz. Table 5.1 indicates that the corresponding transmitted SELCAL code is 'AM-BM' and only the aircraft with this code would then be alerted to the need to respond to an incoming message.

The RF signal transmitted by the ground radio station should contain (within 3 dB) equal amounts of the two modulating tones and the combination of tones should result in a modulation envelope having a nominal modulation percentage as high as possible (and in no case less than 60%).

The transmitted tones are made up from combinations of the tones listed in Table 5.1. Note that the tones have been chosen so that they are not harmonically related (thus avoiding possible confusion within the SELCAL decoder when harmonics of the original tone frequencies might be present in the demodulated waveform).

Table 5.1 SELCAL tone frequencies

Character	*Frequency*
A	312.6 Hz
B	346.7 Hz
C	384.6 Hz
D	426.6 Hz
E	473.2 Hz
F	524.8 Hz
G	582.1 Hz
H	645.7 Hz
J	716.1 Hz
K	794.3 Hz
L	881.0 Hz
M	977.2 Hz
P	1083.9 Hz
Q	1202.3 Hz
R	1333.5 Hz
S	1479.1 Hz

5.4 HF data link

ARINC's global high frequency data link (HFDL) coverage provides a highly cost-effective data link capability for carriers on remote oceanic routes, as well as the polar routes at high latitudes where SATCOM coverage is unavailable. HFDL is lower in cost than SATCOM and many carriers are using HFDL instead of satellite services, or as a backup system. HFDL is still the only data link technology that works over the North Pole, providing continuous, uninterrupted data link coverage on the popular polar routes between North America and eastern Europe and Asia.

The demand for HFDL has grown steadily since ARINC launched the service in 1998, and today HFDL avionics are offered as original equipment by all the major airframe manufacturers. HFDL offers a cost-effective solution for global data link service. The demand for HFDL service is currently growing by more

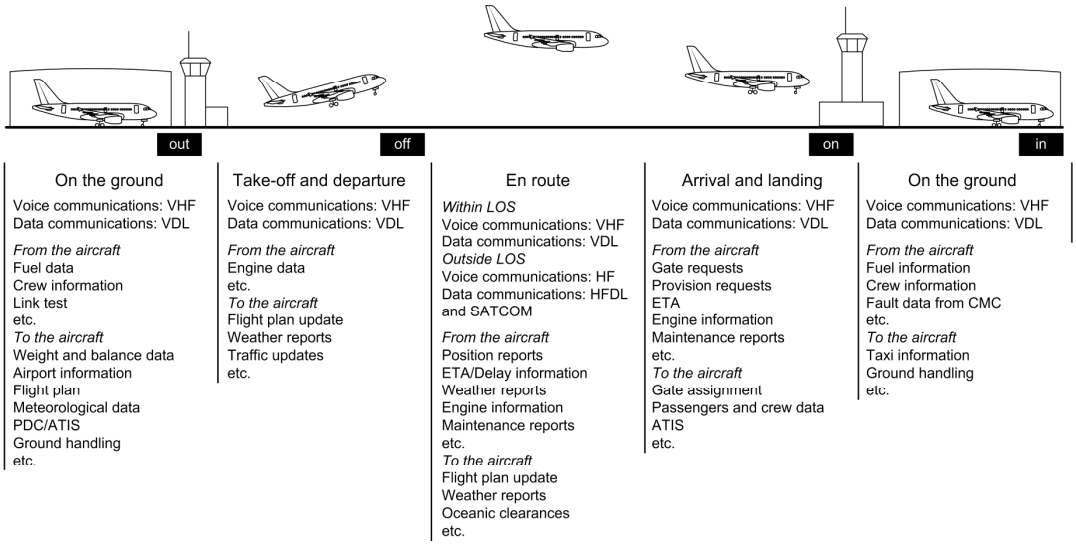

Figure 5.4 Aircraft operational control at various 'out-off-on-in' (OOOI) stages

than several hundred aircraft per year.

Advantages of HFDL can be summarised as:

- wide coverage due to the extremely long range of HF signals
- simultaneous coverage on several bands and frequencies (currently 60)
- multiple ground stations (currently 14) at strategic locations around the globe
- relatively simple avionics using well-tried technology
- rapid network acquisition
- exceptional network availability.

Disadvantages of HFDL are:

- very low data rates (making the system unsuitable for high-speed wideband communications).

As a result of the above, the vast majority of HFDL messages are related to **airline operational control** (AOC) (see Fig.ure 5.4) but HFDL is also expected to play an important part in **future air navigation systems** (FANS) where it will provide a further means of data linking with an aircraft, supplementing VDL, GPS, and SATCOM systems. Note that SATCOM can support much faster data rates but it can also be susceptible to interruptions and may not available at high latitudes.

HFDL uses **phase shift keying** (PSK) at data rates of 300, 600, 1200 and 1800 bps. The rate used is dependent on the prevailing propagation conditions. HFDL is based on **frequency division multiplexing** (FDM) for access to ground station frequencies and **time division multiplexing** (TDM) within individual communication channels. Figure 5.5 shows how the frequency spectrum of a typical HFDL signal at 300 bps compares with an HF voice signal.

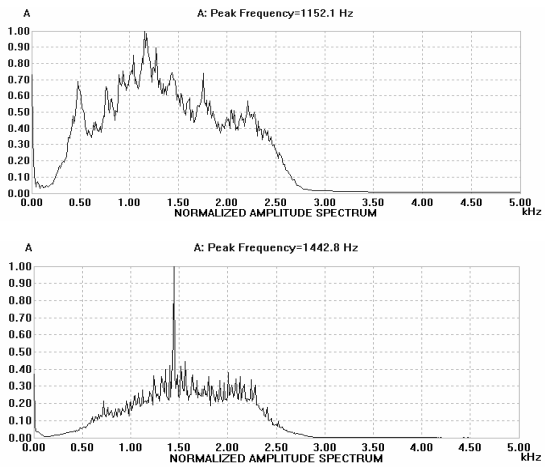

Figure 5.5 Frequency spectra of voice (upper trace) and HFDL signals (lower trace)

```
Preamble 300  bps 1.8 sec Interleaver FREQ ERR 5.398116 Hz Errors 0
[MPDU AIR CRC PASS]
Nr LPDUs = 1 Ground station ID SHANNON - IRELAND SYNCHED
Aircraft ID LOG-ON
Slots Requested medium = 0 Low = 0
Max Bit rate 1800 bps U(R) = 0 UR(R)vect = 0
[LPDU LOG ON DLS REQUEST] ICAO AID 0A123C
[HFNPDU FREQUENCY DATA]
14:45:24  UTC  Flight ID = AB3784  LAT 39 37 10  N  LON 0 21 20  W
07 87 FF 00 04 00 14 85 92 BF 3C 12 0A FF D5     ...............
41 42 33 37 38 34 C8 C2 31 BF FF C2 67 88 8C     A B 3 7 8 4 ..1 ...g ..
00 00 00 00 00 00 00 00 00 00 00 00 00 00 00     ...............
00 00 00 00 00 00 00 00 00 00 00 00 00 00 00     ...............
00 00 00 00 00 00 00             .......

Preamble 300  bps 1.8 sec Interleaver FREQ ERR -18.868483 Hz Errors 19
[MPDU AIR CRC PASS]
Nr LPDUs = 1 Ground station ID SHANNON - IRELAND SYNCHED
Aircraft ID LOG-ON
Slots Requested medium = 0 Low = 0
Max Bit rate 1200 bps U(R) = 0 UR(R)vect = 0
[LPDU LOG ON DLS REQUEST] ICAO AID 4A8002
[HFNPDU FREQUENCY DATA]
14:45:30  UTC  Flight ID = SU0106  LAT 54 42 16  N  LON 25 50 42  E
07 87 FF 00 03 00 14 80 1E BF 02 80 4A FF D5     ............J ..
53 55 30 31 30 36 6A 6E F2 60 12 C5 67 33 FB     S U 0 1 0 6 j n ....g 3 .
00 00 00 00 00 00 00 00 00 00 00 00 00 00 00     ...............
00 00 00 00 00 00 00 00 00 00 00 00 00 00 00     ...............
00 00 00 00 00 00 00             .......

Preamble 300  bps 1.8 sec Interleaver FREQ ERR 15.059247 Hz Errors 2
[MPDU AIR CRC PASS]
Nr LPDUs = 1 Ground station ID SHANNON - IRELAND SYNCHED
Aircraft ID AF
Slots Requested medium = 0 Low = 0
Max Bit rate 1200 bps U(R) = 0 UR(R)vect = 0
[LPDU UNNUMBERED DATA]
[HFNPDU PERFORMANCE]
14:45:30  UTC  Flight ID = LH8409  LAT 46 42 34  N  LON 21 22 55  E
07 87 AF 00 03 00 31 4D 1D 0D FF D1 4C 48 38     ......1 M ....L H 8
34 30 39 73 13 82 34 0F C5 67 01 36 03 02 02     4 0 9 s ..4 ..g .6 ...
00 B6 00 00 00 00 00 00 00 00 03 00 00 00 00     ...............
02 00 00 00 00 00 01 00 00 00 01 01 D3 EA 00     ...............
00 00 00 00 00 00 00             .......

Preamble 300  bps 1.8 sec Interleaver FREQ ERR 8.355845 Hz Errors 0
[MPDU AIR CRC PASS]
Nr LPDUs = 1 Ground station ID SHANNON - IRELAND SYNCHED
Aircraft ID AD
Slots Requested medium = 0 Low = 0
Max Bit rate 1200 bps U(R) = 0 UR(R)vect = 0
[LPDU UNNUMBERED DATA]
[HFNPDU PERFORMANCE]
14:43:30  UTC  Flight ID = LH8393  LAT 52 37 27  N  LON 16 46 41  E
07 87 AD 00 03 00 31 C5 0B 0D FF D1 4C 48 38     ......1 .....L H 8
33 39 33 BF 56 62 EE 0B 89 67 01 8A 07 01 B8     3 9 3 .V b ...g .....
00 7E 00 00 00 00 00 00 00 06 0F 00 00 00 00     ...............
2E 00 00 00 00 00 05 00 00 00 05 07 08 27 00     ...............
00 00 00 00 00 00 00             .......
```

Figure 5.6 Examples of aircraft communication using HFDL

Figure 5.7 Ground station and aircraft locations for the HFDL communications in Figure 5.6

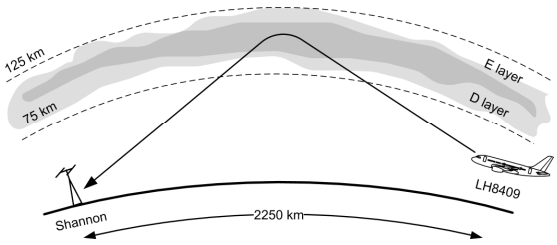

Figure 5.8 Radio path for LH8409

Figure 5.6 shows typical HFDL messages sent from the four aircraft shown in Figure 5.7 to the Shannon HFDL ground station using the same communications channel. The radio path from one of the aircraft (LH8409) is illustrated in Figure 5.8. The first two of the messages shown in Figure 5.6 are **log-on requests** and the maximum bit rate is specified in the header. In each log-on request, the aircraft is identified by its unique 24-bit **ICAO address**. Once logged on, the aircraft is allocated an 8-bit **address code** (AF hex in the case of the third message and AD hex in the case of the fourth message). Each aircraft also transmits its current location data (longitude and latitude).

The system used for HFDL data exchange is specified in ARINC 635. Each ground station transmits a frame called a 'squitter' every 32 seconds. The **squitter frame** informs aircraft of the system status, provides a timing reference and provides protocol control. Each ground station has a time offset for its squitters. This allows aircraft to jump between ground stations finding the best one before logging on. When passing traffic, dedicated TDM time slots are used. This prevents two aircraft transmitting at the same time causing **data collisions**.

5.5 HF radio equipment

The block schematic of a simple HF transmitter/receiver is shown in Figure 5.9. Note that, whilst this equipment uses a single intermediate frequency (IF), in practice most modern aircraft HF radios are much more complex and use two or three intermediate frequencies.

On transmit mode, the DSB suppressed carrier (Figure 5.2b) is produced by means of a **balanced modulator** stage. The balanced modulator rejects the carrier and its output just comprises the upper and lower sidebands. The DSB signal is then passed through a multiple-stage crystal or mechanical filter. This filter has a very narrow pass-band (typically 3.4 kHz) at the intermediate frequency (IF) and this rejects the unwanted sideband. The resulting SSB signal is then mixed with a signal from the digital frequency synthesiser to produce a signal on the wanted channel. The output from the mixer is then further amplified before being passed to the output stage. Note that, to avoid distortion, all of the stages must operate in linear mode.

When used on receive mode, the incoming signal frequency is mixed with the output from the digital frequency synthesiser in order to produce the intermediate frequency signal. Unwanted adjacent channel signals are removed by means of another multiple-stage crystal or mechanical filter which has a pass-band similar to that used in the transmitter. The IF signal is then amplified before being passed to the demodulator.

The (missing) carrier is reinserted in the demodulator stage. The carrier signal is derived from an accurate crystal controlled carrier oscillator which operates at the IF frequency. The recovered audio signal from the demodulator is then passed to the audio amplifier where it is amplified to an appropriate level for passing to a loudspeaker.

The typical specification for an aircraft HF radio is shown in Table 5.2. One or two radios of this type are usually fitted to a large commercial aircraft (note that at least one HF radio is a requirement for *any* aircraft following a trans-oceanic route). Figure 5.10 shows the flight deck location of the **HF radio controller**.

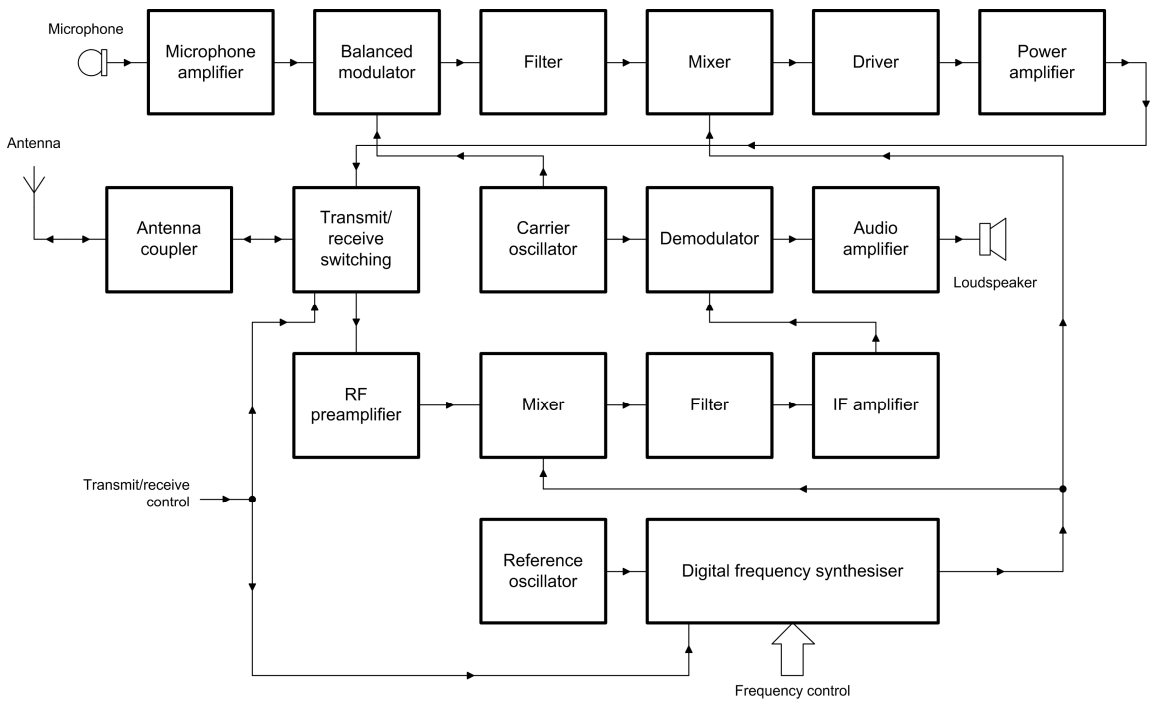

Figure 5.9 A simple SSB transmitter/receiver

Table 5.2 Aircraft HF radio specifications

Parameter	*Specification*
Frequency range	2.0000 MHz to 29.9999 MHz
Tuning steps	100 Hz
Operating modes	SSB SC analogue voice (ARINC 719) and analogue data (ARINC 753 and ARINC 635) at up to 1800 bps; DSB AM (full carrier)
Sensitivity	1 μV for 10 dB (S+N)/N SSB; 4 μV for 10 dB (S+N)/N AM
Selectivity	6 dB max. attenuation at +2.5 kHz 60 dB min. attenuation at +3.4 kHz
Audio output	50 mW into 600 Ω
SELCAL output	50 mW into 600 Ω
RF output power	200 W pep min. SSB; 50 W min. DSB AM
Frequency stability	±20 Hz
Audio response	350 Hz to 2500 Hz at −6 dB
Mean time between failure	Greater than 50,000 hours

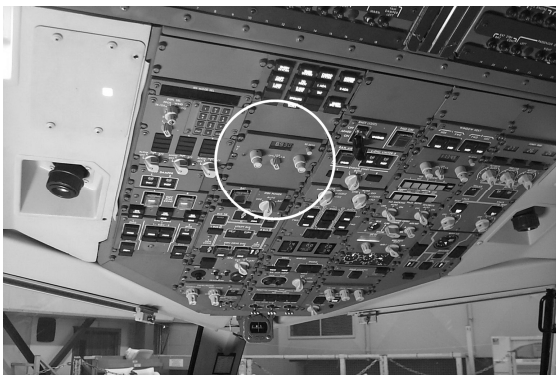

Figure 5.10 HF radio control unit

Test your understanding 5.2

1. Explain how HF data link (HFDL) differs from VHF data link (VDL). Under what circumstances is HFDL used and what advantages does it offer?
2. Explain briefly how an aircraft logs on to the HFDL system. How are data collisions avoided?

5.6 HF antennas and coupling units

External wire antennas were frequently used on early aircraft. Such antennas would usually run from the fuselage to the top of the vertical stabiliser and they were sufficiently long to permit resonant operation on one or more of the aeronautical HF bands. Unfortunately this type of antenna is unreliable and generally unsuitable for use with a modern high-speed passenger aircraft. The use of a large probe antenna is unattractive due to its susceptibility to static discharge and lightning strike. Hence an alternative solution in which the HF antenna is protected within the airframe is highly desirable. Early experiments (see Figure 5.13) showed that the vertical stabiliser (tail fin) would be a suitable location

Figure 5.11 HF antenna location

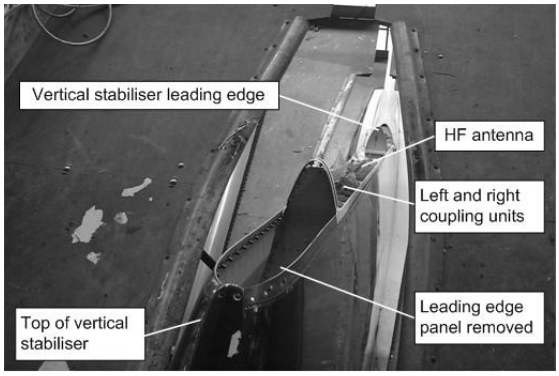

Figure 5.12 View from the top of the vertical stabiliser (leading edge panel

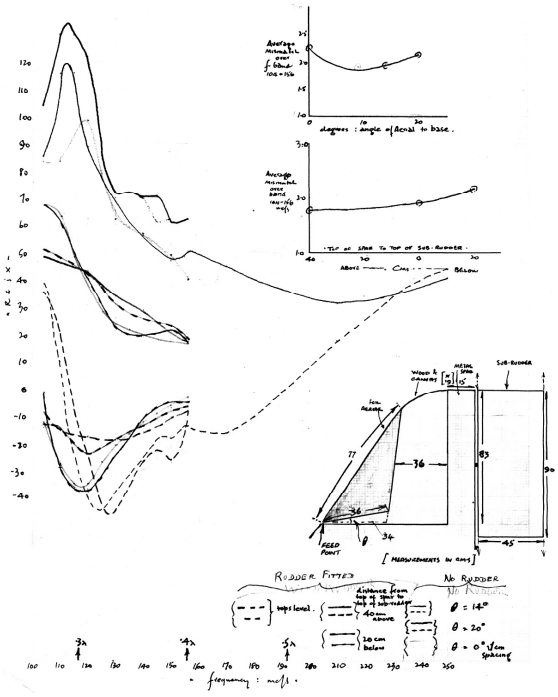

Figure 5.13 Original sketches for a tail-mounted antenna from work carried out by E. H. Tooley in 1944

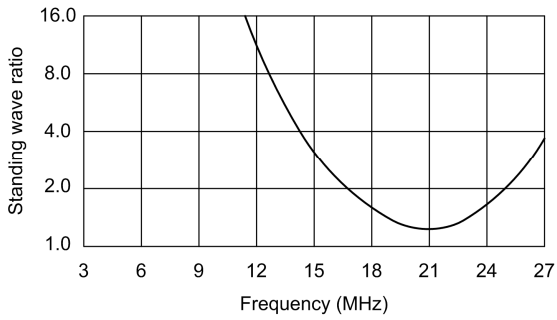

Figure 5.14 Variation of SWR with frequency for an HF notch antenna (note the logarithmic scale used for SWR)

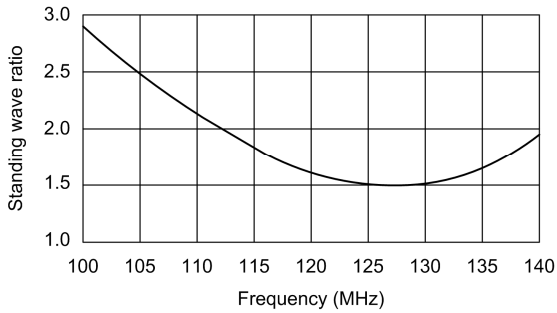

Figure 5.15 Variation of SWR with frequency for a VHF quarter-wave blade antenna (note the linear scale used for SWR)

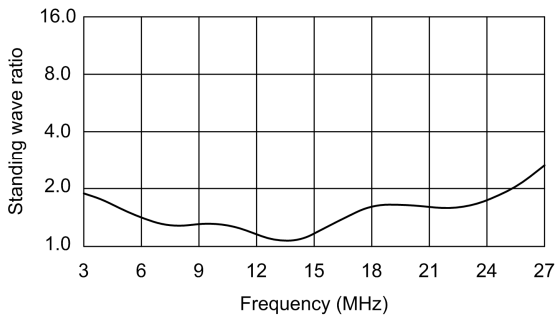

Figure 5.16 Variation of SWR with frequency for an HF notch antenna fitted with an antenna coupling/tuning unit

and is now invariably used to house the HF antenna and its associated coupling unit on most large transport aircraft—see Figures 5.11 and 5.12.

Due to the restriction in available space (which mitigates against the use of a resonant antenna such as a quarter-wave Marconi antenna—see page 24) the HF antenna is based on a notch which uses part of the airframe in order to radiate effectively. The notch itself has a very high-Q factor and its resistance and reactance varies very widely over the operating frequency range (i.e. 3 MHz to 24 MHz). The typical variation of **standing wave ratio** (SWR—see page 33) against frequency for an HF notch antenna is shown in Figure 5.14. For comparison, the variation of SWR with frequency for a typical quarter-wave VHF blade antenna is shown in Figure 5.15.

From Figures 5.14 and 5.15 it should be obvious that the HF antenna, whilst well matched at 21 MHz, would be severely mismatched to a conventional 50 Ω feeder/transmitter at most other HF frequencies. Because of this, and because the notch antenna is usually voltage fed, it is necessary to use an HF coupling/tuning unit

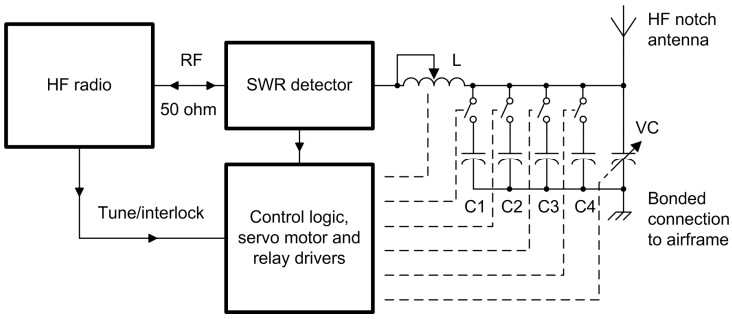

Figure 5.17 Typical feedback control system used in an HF antenna coupler

between the HF radio feeder and the notch antenna. This unit is mounted in close proximity to the antenna, usually close to the top of the vertical stabiliser (see Figure 5.12). Figure 5.16 shows the effect of using a coupling/tuning unit on the SWR-frequency characteristic of the same notch antenna that was used in Figure 5.14. Note how the SWR has been reduced to less than 2:1 for most (if not all) of the HF range.

The tuning adjustment of HF antenna coupler is entirely automatic and only requires a brief signal from the transmitter to retune to a new HF frequency. The HF antenna coupler unit incorporates an SWR bridge (see page 35) and a feedback control system (see Figure 5.17) to adjust a roller coater inductor (L1) and high-voltage vacuum variable capacitor (C1) together with a number of switched high-voltage capacitors (C1 to C4). The internal arrangement of a typical HF antenna coupler is shown in Figures 5.18 and 5.19. The connections required between the HF antenna coupler, HF radio and control unit are shown in Figure 5.20.

Voltages present in the vicinity of the HF antenna (as well as the field radiated by it) can be extremely dangerous. It is therefore **essential** to avoid contact with the antenna and to maintain a safe working distance from it (at least 5 metres) whenever the HF radio system is 'live'.

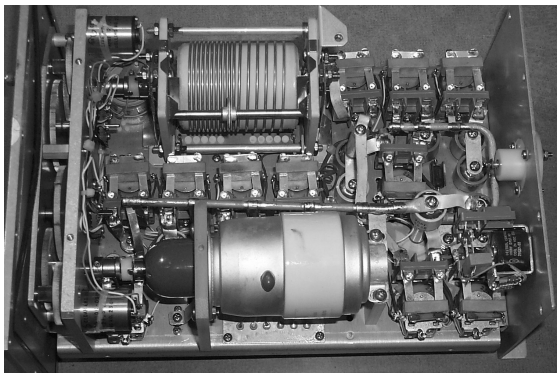

Figure 5.18 Interior view of an HF antenna coupler showing the roller coaster inductor (top) and vacuum variable capacitor (bottom). The high-voltage antenna connector is shown in the extreme right

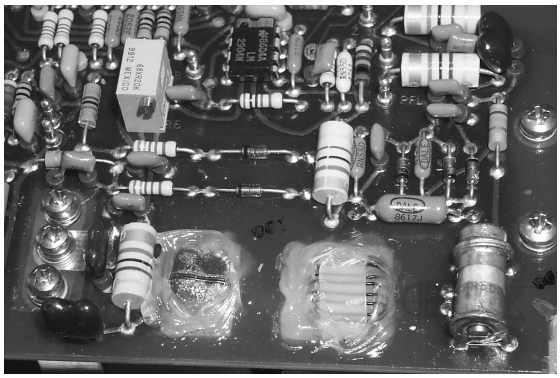

Figure 5.19 SWR bridge circuit incorporated in the HF antenna coupler. The output from the SWR bridge provides the error signal input to the automatic feedback control system

Test your understanding 5.3

Explain the function of an HF antenna coupler. What safety precautions need to be observed when accessing this unit?

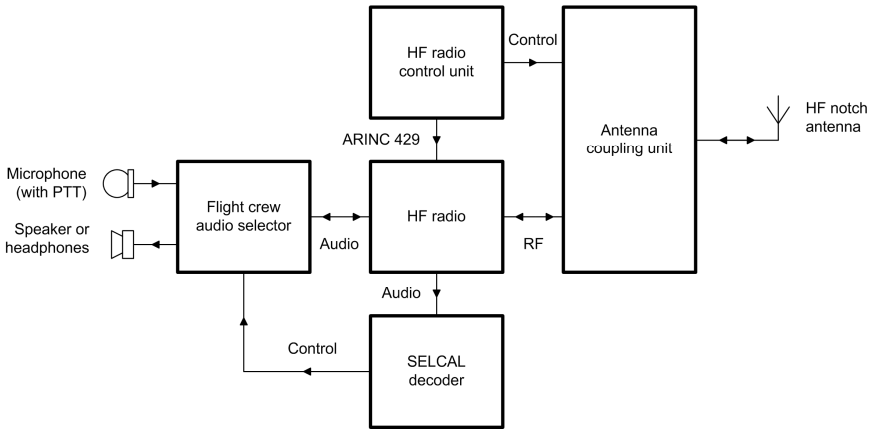

Figure 5.20 Connections to the HF radio, control unit and antenna coupling unit

5.7 Multiple choice questions

1. The typical bandwidth of an aircraft HF SSB signal is:
   (a) 3.4 kHz
   (b) 7 kHz
   (c) 25 kHz.

2. The principal advantage of SSB over DSB AM is:
   (a) reduced bandwidth
   (b) improved frequency response
   (c) faster data rates can be supported.

3. HF data link uses typical data rates of:
   (a) 300 bps and 600 bps
   (b) 2400 bps and 4800 bps
   (c) 2400 bps and 31,500 bps.

4. The standard for HF data link is defined in:
   (a) ARINC 429
   (b) ARINC 573
   (c) ARINC 635.

5. Which one of the following gives the approximate range of audio frequencies used for SELCAL tones?
   (a) 256 Hz to 2048 Hz
   (b) 312 Hz to 1479 Hz
   (c) 300 Hz to 3400 Hz.

6. How many alphanumeric characters are transmitted in a SELCAL code?
   (a) 4
   (b) 8
   (c) 16.

7. How many bits are used in an ICAO aircraft address?
   (a) 16
   (b) 24
   (c) 32.

8. The typical RF output power from an aircraft HF transmitter is:
   (a) 25 W pep
   (b) 50 W pep
   (c) 400 W pep.

9. An HF radio is required for use on oceanic routes because:
   (a) VHF coverage is inadequate
   (b) higher power levels can be produced
   (c) HF radio is more reliable.

10. The function of an HF antenna coupler is to:
    (a) reduce static noise and interference
    (b) increase the transmitter output power
    (c) match the antenna to the radio.

Chapter 6 Flight-deck audio systems

As well as systems for communication with ground stations, modern passenger aircraft require a number of facilities for local communication within the aircraft. In addition, there is a need for communications with those who work on the aircraft when it is being serviced on the ground.

Systems used for local communications need to consist of nothing more than audio signals, suitably amplified, switched and routed, and incorporating a means of alerting appropriate members of the crew and other personnel.

These flight-deck audio systems include:

- passenger address (PA) system
- service interphone system
- cabin interphone system
- ground crew call system
- flight interphone system.

The **passenger address system** provides the flight crew and cabin crew with a means of making announcements and distributing music to passengers through cabin speakers. Circuits in the system send chime signals to the cabin speakers.

The **service interphone system** provides the crew and ground staff with interior and exterior communication capability. Circuits in the system connect service interphone jacks to the flight compartment.

The **cabin interphone system** provides facilities for communication among cabin attendants, and between the flight compartment crew members and attendants. The system can be switched to the input of the passenger address system for PA announcements.

The **ground crew call system** provides a signalling capability (through the ground crew call horn) between the flight compartment and nose landing gear area.

The **flight interphone system** provides facilities for interphone communication among flight compartment crew members and provides the means for them to receive, key and transmit using the various aircraft radio systems. The flight interphone system also extends communication to ground personnel at the nose gear interphone station and allows flight compartment crew members to communicate and to make passenger address announcements. The flight interphone system also incorporates amplifiers and mixing circuits in the audio accessory unit, audio selector panels, cockpit speakers, microphone/headphone jacks and press-to-talk (PTT) switches.

In addition to the audio systems used for normal operation of the aircraft, large commercial aircraft are also required to carry a **cockpit voice recorder** (CVR). This device captures and stores information derived from a number of the aircraft's audio channels. Such information may later become invaluable in the event of a crash or malfunction.

6.1 Flight interphone system

The flight interphone system provides the essential connecting link between the aircraft's communication systems, navigation receivers and flight-deck crew members. The flight interphone system also extends communication to ground personnel at external stations (e.g. the nose gear interphone station). It also provides the means by which members of the flight crew can communicate with the cabin crew and also make passenger address announcements. The flight interphone system comprises a number of sub-systems including amplifiers and mixing circuits in the audio accessory unit, audio selector panels, cockpit speakers, microphone/headphone jacks and **press-to-talk** (PTT) switches.

The flight interphone components provided for the captain and first officer usually comprise the following components:

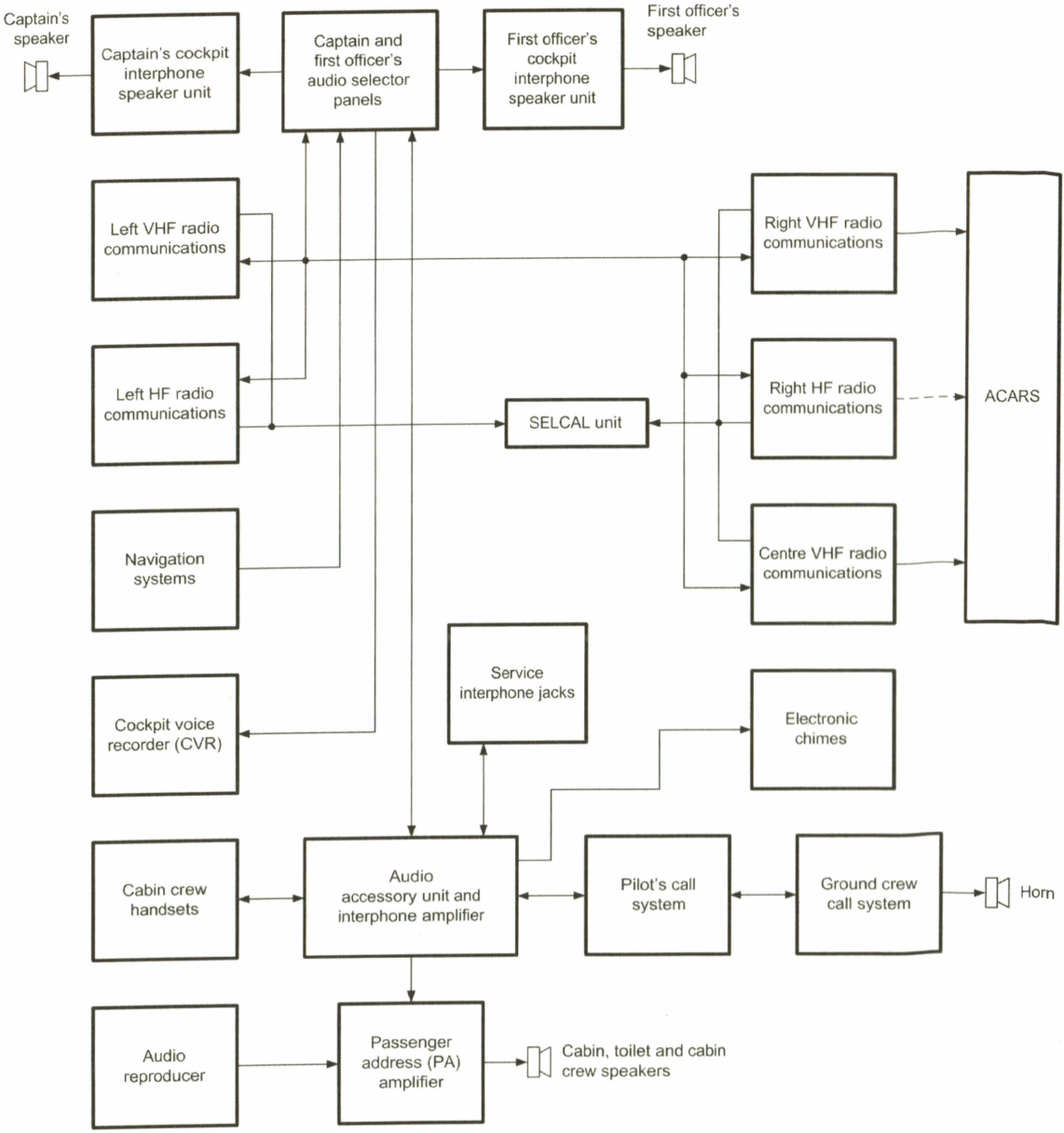

Figure 6.1 Simplified block schematic diagram of a typical flight interphone system

- audio selector panel
- headset, headphone, and hand microphone jack connectors
- audio selector panel and control wheel press-to-talk (PTT) switches
- cockpit speakers.

Note that, where a third (or fourth) seat is provided on the flight deck, a third (or fourth) set of flight interphone components will usually be available for the observer(s) to use. In common with other communication systems fitted to the aircraft, the flight interphone system normally

derives its power from the aircraft's 28 V DC battery bus through circuit breakers on the overhead panel.

The simplified block schematic diagram of a typical flight interphone system is shown in Figure 6.1. Key subsystem components are the captain and first officer's audio selector panels and the **audio accessory unit** that provides a link from the flight deck audio system to the passenger address, cabin and service interphones, and ground crew call systems. It is also worth noting from Figure 6.1 that the audio signals (inputs and outputs) from the HF and VHF radio communications equipment as well as the audio signals derived from the navigation receivers (outputs only) are also routed via the audio selector panels. This arrangement provides a high degree of configuration flexibility together with a degree of redundancy sufficient to cope with failure of individual subsystem components.

Finally, it should be emphasised that the arrangement depicted in Figure 6.1 is typical and that minor variations can and do exist. For example, most modern aircraft incorporate SATCOM facilities (not shown in Figure 6.1).

The **flight interphone amplifier** is usually located in the audio accessory unit in the main avionic equipment rack). The amplifier receives low-level microphone inputs and provides audio to all flight interphone stations. The amplifier has preset internal adjustments for compression, squelch and volume.

Audio selector panels are located in the flight compartment within easy of reach of the crew members. Audio selector panels are provided for the captain and first officer as well as any observers that may be present on the flight deck. Depending on aircraft type and flight deck configuration, audio selector panels may be fitted in the central pedestal console or in the overhead panels. Typical examples of cockpit audio selector panel layouts are shown in Figures 6.2 and 6.3. Each audio selector panel contains microphone selector switches which connect microphone circuits to the interphone systems, to the radio communication systems, or to the passenger address system. The push-to-talk (PTT) switch on the audio selector panels can be used to key the flight compartment microphones. Volume control is provided by switches on each audio selector panel.

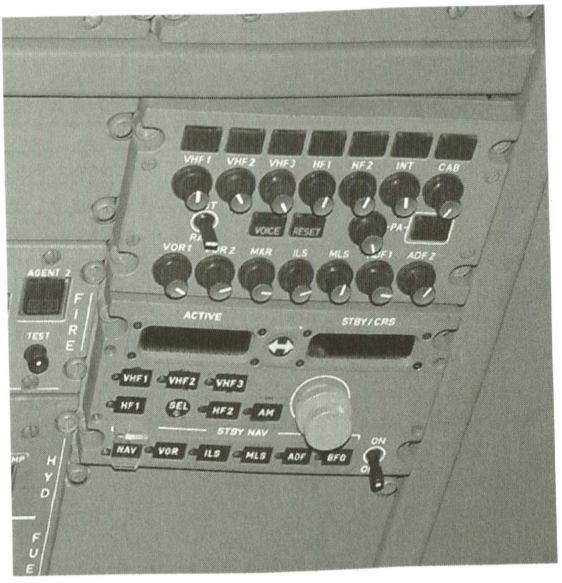

Figure 6.2 First officer's audio selector panel (top) and radio panel (bottom) fitted in the overhead panel of an A320 aircraft

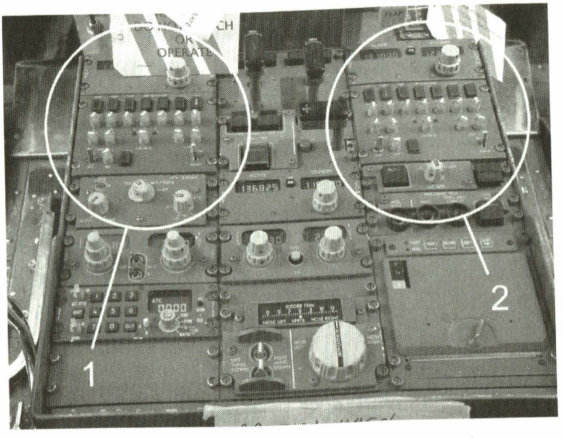

Figure 6.3 Captain's audio selector (1) and first officer's audio selector (2) fitted in the central console of a Boeing 757 aircraft

Two **cockpit speaker units** are usually fitted in the flight compartment. These are usually located in the sidewall panels adjacent to the captain's and first officer's stations. Each cockpit speaker unit contains a loudspeaker, amplifier, muting circuits, and a **volume control**. The speakers receive all audio signals provided to the audio selector panels. The speakers are muted whenever a PTT switch is pushed at the captain's or first officer's station.

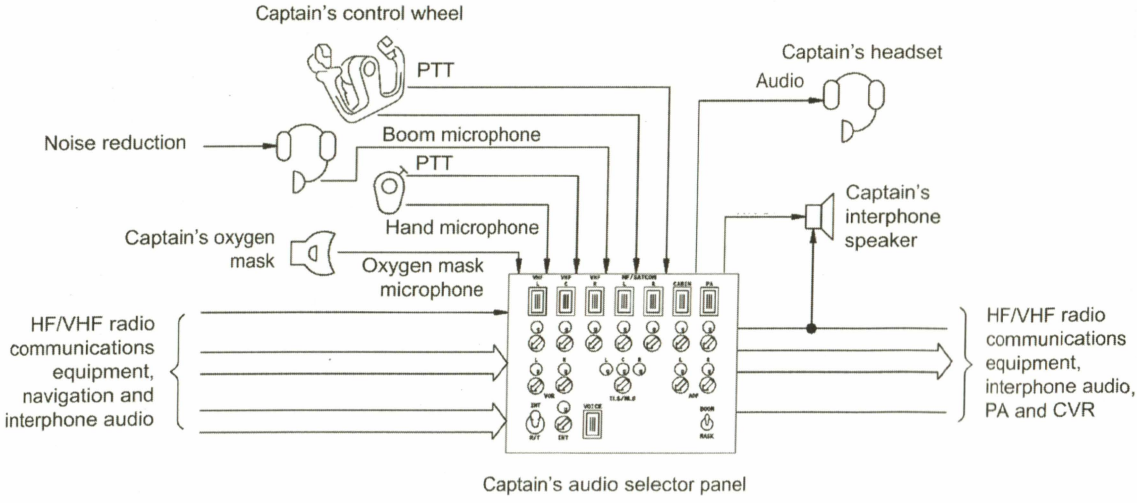

Figure 6.4 Typical arrangement for the captain's audio selector. A similar arrangement is used for the first officer's audio selector as well as any supernumerary crew members that may be present on the flight deck

Several **jack panels** are provided for a headset with integral boom microphone for the captain, first officer and observer. Hand microphones may also be used. Push-to-talk (PTT) switches are located at all flight interphone stations. The hand microphone, control wheel, and audio selector panels all have PTT switches. The switch must be pushed before messages are begun or no transmission can take place. Audio and control circuits to the audio selector panel are completed when the PTT switch is operated.

The flight interphone system provides common microphone circuits for the communications systems and common headphone and speaker circuits for the communications and navigation systems.

Figure 6.4 shows a typical arrangement for the captain's audio selector panel (note that the flight interphone components and operation are identical for both the captain and first officer). Similar (though not necessarily identical) systems are available for use by the observer and any other supernumerary crew members (one obvious difference is the absence of a control wheel push-to-talk switch and cockpit speaker). Switches are provided to select boom microphone, hand microphone (where available) as well as microphones located in the oxygen masks (for emergency use). Outputs can be selected for use with the headset or cockpit loudspeakers.

Amplifiers, summing networks, and filters in the audio selector panel provide audio signals from the interphone and radio communication systems to the headphones and speakers. Audio signals from the navigation receivers are also monitored through the headphones and speakers. Reception of all audio signals is controlled by the volume switches. The captain's INT microphone switch is illuminated when active. Note that this switch is interlocked with the other microphone switches so that only one at a time can be pushed.

The navigation system's (ADF, VOR, ILS, etc.) audio is also controlled by switches on the audio selector panel. The left, centre, or right (L, C, R) switches control selection and volume of the desired receiver. The VOICE-BOTH-RANGE switch acts as a filter that separates voice signals and range signals. The filter switch can also combine both voice and range signals. All radio communication, interphone, and navigation outputs are received and recorded by the **cockpit voice recorder** (CVR).

A typical procedure for checking that the microphone audio is routed to the radio communication, interphone, or passenger address system is as follows:

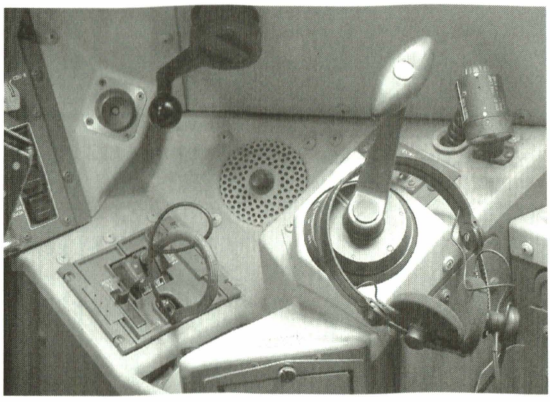

Figure 6.5 First officer's loudspeaker (centre) in a Boeing 757 aircraft (the volume control is mounted in the centre of the loudspeaker panel)

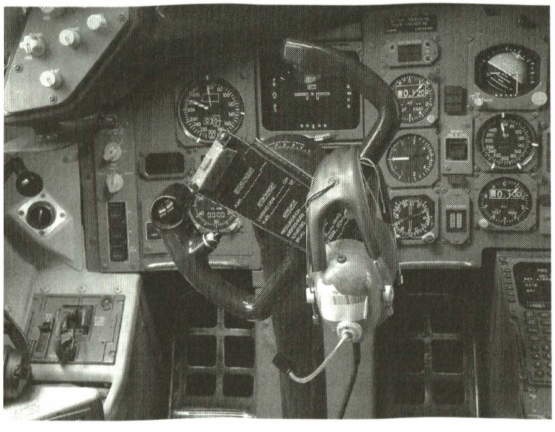

Figure 6.6 Captain's headset and boom microphone in a Boeing 757 aircraft. The press-to-talk (PTT) switch can be seen on the left-hand section of the control wheel

1. Push the microphone select switch on the audio selector panel to select the required communication system.
2. If a handheld microphone is used, push the PTT switch on the microphone and talk.
3. If a boom microphone or oxygen mask microphone is used, select MASK or BOOM with the toggle switch on the audio selector panel and push the audio selector panel or control wheel PTT switch and talk.

The following procedure is used to listen to navigation and communication systems audio:

Figure 6.7 First officer's headset and boom microphone in an A320 aircraft

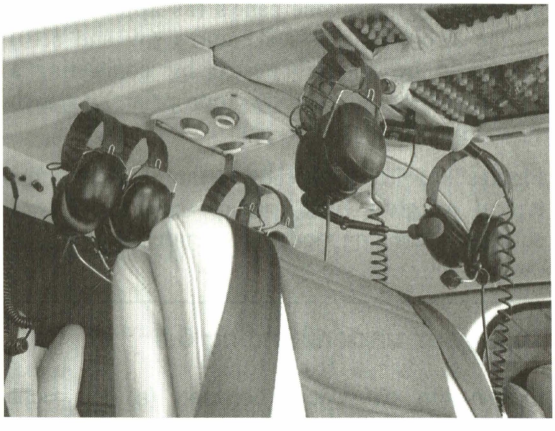

Figure 6.8 Headsets and boom microphones in a four-seat rotorcraft

1. For communications systems, adjust the volume control switch on the audio selector panel and listen to the headset.
2. For navigation systems audio, select desired left-centre-right (L-C-R) and filter (VOICE-BOTH-RANGE) positions on the audio selector panel, adjust volume control switch and listen to headset.

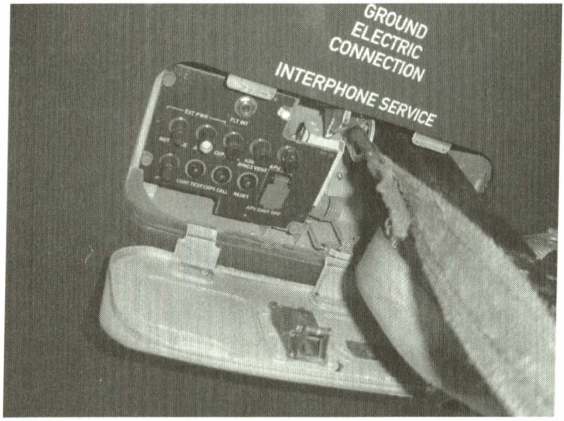

Figure 6.9 Ground staff interphone jack connector

3. The captain's and first officer's cockpit speakers (see Figure 6.5) can be used to listen to navigation as well as communication system audio. A control in the centre of the cockpit speaker (Boeing aircraft) or on an adjacent panel (Airbus) adjusts the speaker volume to the desired level.
4. External interphone panels (as appropriate to the aircraft type—see Figures 6.9 and 6.10) should be similarly tested by connecting a headset or handset (as appropriate) to each interphone jack.

Figures 6.5 to 6.10 show examples of some typical flight deck audio communications equipment used on modern passenger aircraft.

Test your understanding 6.1

Explain the differences between (a) the flight interphone and (b) the cabin interphone systems.

Test your understanding 6.2

1. Explain the function of the audio selector panels used by members of the flight crew.

2. List THREE different examples of inputs to an audio selector panel and THREE different examples of outputs from an audio selector panel.

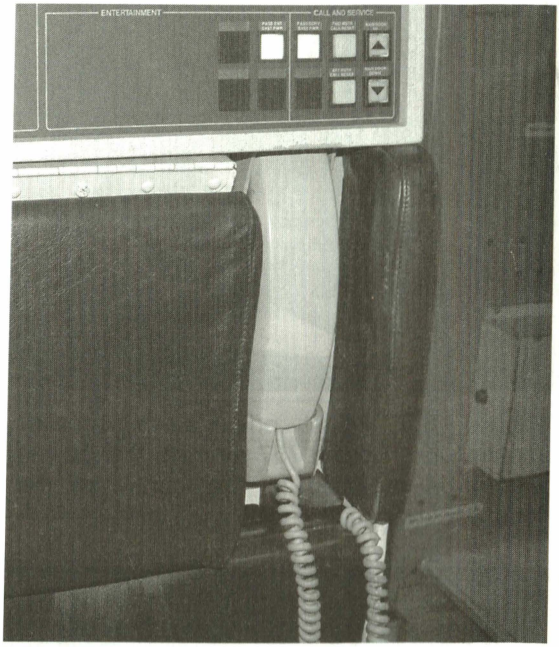

Figure 6.10 Cabin interphone/passenger address handset

6.2 Cockpit voice recorder

The cockpit voice recorder (CVR) can provide valuable information that can later be analysed in the event of an accident or serious malfunction of the aircraft or any of its systems. The voice recorder preserves a continuing record of typically between 30 and 120 minutes of the most recent flight crew communications and conversations.

The storage medium used with the CVR fitted to modern aircraft is usually based on one or more solid state memory devices whereas on older aircraft the CVR is usually based on a continuous loop of magnetic tape.

The CVR storage unit must be recoverable in the event of an accident. This means that the entire recorder unit including storage media must be mounted in an enclosure that can withstand severe mechanical and thermal shock as well as the high pressure that exists when a body is immersed at depth in water.

The CVR is usually fitted with a test switch, headphone jack, status light (green) and an externally mounted **underwater locator beacon**

(ULB) to facilitate undersea recovery. The ULB is a self-contained device (invariably attached to the front panel of the CVR) that emits an ultrasonic vibration (typically at 37.5 kHz) when the water-activated switch is activated as a result of immersion in either sea water or fresh water. A label on the ULB indicates the date by which the internal battery should be replaced. A typical specification for a ULB is shown in Table 6.1. An external view of a CVR showing its externally mounted ULB is shown in Figure 6.11.

The audio input to the CVR is derived from the captain, first officer, observer (where present) and also from an **area microphone** in the flight compartment which is usually mounted in the overhead panel and thus collects audio input from the entire flight-deck area.

In order to improve visibility and aid recovery, the external housing of the CVR is painted bright orange. The unit is thermally insulated and hermetically sealed to prevent the ingress of water. Because of the crucial nature of the data preserved by the flight, the unit should only be opened by authorised personnel following initial recovery from the aircraft.

Magnetic CVR use a multi-track tape transport mechanism. This normally comprises a tape drive, four recording heads, a single (full-width) erase head, a monitor head and a bulk erase coil. The bias generator usually operates at around 65 kHz and an internal signal (at around 600 Hz) is often provided for test purposes. Bulk erase can be performed by means of an erase switch (which is interlocked so that bulk tape erasure can only be performed when the aircraft is on the ground and the parking brake is set). The erase current source is usually derived directly from the aircraft's 115 V AC 400 Hz supply. The magnetic tape (a continuous loop) is usually 308 ft in length and ¼ in wide.

More modern solid-state recording media uses no moving parts (there is no need for a drive mechanism) and is therefore much more reliable. Erasure can be performed electronically and there is no need for a separate erase coil and AC supply. Finally, it is important to note that the CVR is usually mounted in the aft passenger cabin ceiling. This location offers the greatest amount of protection for the unit in the event of a crash.

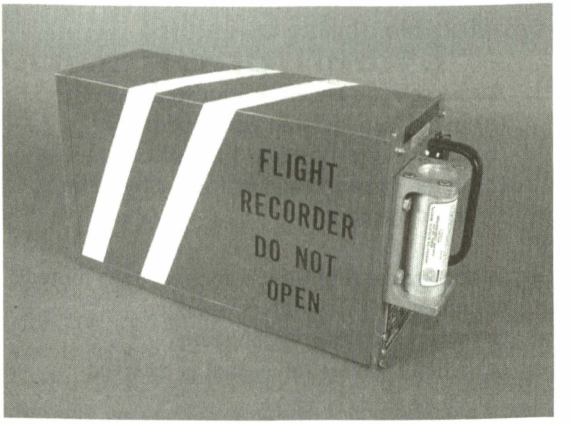

Figure 6.11 Cockpit voice recorder fitted with an underwater locator beacon (ULB)

Table 6.1 Typical ULB specification

Parameter	*Specification*
Operating frequency	37.5 kHz (± 1 kHz)
Acoustic output	160 dB relative to 1 μPa at 1 m
Pulse repetition rate	0.9 pulses per sec
Pulse duration	10 ms
Activation	Immersion in either salt water or fresh water
Power source	Internal lithium battery
Battery life	6 years standby (shelf-life)
Beacon operating life	30 days
Operating depth	20,000 ft (6,096 m)
Housing material	Aluminium
Length	3.92 in (9.95 cm)
Diameter	1.3 in (3.3 cm)
Weight	6.7 oz (190 g)

Test your understanding 6.3

1. Explain the function and principle of operation of the underwater locator beacon (ULB) fitted to a cockpit voice recorder (CVR).

2. Explain why the CVR is located in the ceiling of the aft passenger cabin.

6.3 Multiple choice questions

1. Audio selector panels are located:
   (a) in the main avionic equipment bay
   (b) close to the pilot and first officer stations
   (c) in the passenger cabin for use by cabin crew members.

2. When are the flight-deck speaker units muted?
   (a) when a PTT switch is operated
   (b) when a headset is connected
   (c) when a navigation signal is received

3. Input to the captain's interphone speaker unit is derived from:
   (a) the audio selector panel
   (b) the passenger address system
   (c) the audio accessory unit and interphone amplifier.

4. The microphone PTT system is interlocked in order to prevent:
   (a) unwanted acoustic feedback
   (b) more than one switch being operated at any time
   (c) loss of signal due to parallel connection of microphones.

5. Bulk erasure of the magnetic tape media used in a CVR is usually carried out:
   (a) immediately after take-off
   (b) as soon as the aircraft has touched down
   (c) on the ground with the parking brake set.

6. The typical bias frequency used in a magnetic CVR is:
   (a) 3.4 kHz
   (b) 20 kHz
   (c) 65 kHz.

7. The typical frequency emitted by a ULB is:
   (a) 600 Hz
   (b) 3.4 kHz
   (c) 37.5 kHz.

8. Which one of the following is a suitable audio tone frequency for testing a CVR?
   (a) 60 Hz
   (b) 600 Hz
   (c) 6 kHz.

9. A ULB is activated:
   (a) automatically when immersed in water
   (b) manually when initiated by a crew member
   (c) when the unit is subjected to a high impact mechanical shock.

10. The CVR flight deck area microphone is usually mounted:
    (a) on the overhead panel
    (b) on the left-side flight deck floor
    (c) immediately behind the jump seat.

11. The typical pulse rate for a ULB is:
    (a) 0.9 pulses per sec
    (b) 10 pulses per sec
    (c) 60 pulses per sec.

12. The CVR is usually located:
    (a) on the flight deck
    (b) in the avionic equipment bay
    (c) in the ceiling of the aft passenger cabin.

13. What colour is used for the external housing of a CVR?
    (a) red
    (b) green
    (c) orange.

14. A ULB usually comprises:
    (a) a separate externally fitted canister
    (b) an internally fitted printed circuit module
    (c) an external module that derives its power from the CVR.

15. A ULB will operate:
    (a) only in salt water
    (b) only in fresh water
    (c) in either salt water or fresh water.

16. The typical shelf-life of the battery fitted to a ULB is:
    (a) six months
    (b) 18 months
    (c) six years.

Chapter 7 Emergency locator transmitters

The detection and location of an aircraft crash is vitally important to the search and rescue (SAR) teams and to potential survivors. Studies show that while the initial survivors of an aircraft crash have less than a 10% chance of survival if rescue is delayed beyond two days, the survival rate is increased to over 60% if the rescue can be accomplished within eight hours. For this reason, emergency locator transmitters (ELT) are required for most general aviation aircraft. ELT are designed to emit signals on the VHF and UHF bands thereby helping search crews locate aircraft and facilitating the timely rescue of survivors. This chapter provides a general introduction to the types and operating principles of ELT fitted to modern passenger aircraft.

7.1 Types of ELT

Several different types of ELT are in current use. These include the older (and simpler) units that produce a modulated RF carrier on one or both of the two spot VHF frequencies used for distress beacons (121.5 MHz and its second harmonic 243.0 MHz). Note that the former frequency is specified for civil aviation use whilst the latter is sometimes referred to as the military aviation distress frequency. Simultaneous transmission on the two frequencies (121.5 MHz and 243.0 MHz) is easily possible and only requires a frequency doubler and dual-band output stage.

Simple VHF ELT devices generate an RF carrier that is modulated by a distinctive siren-like sound. This sweeps downwards at a repetition rate of typically between 2 and 4 Hz. This signal can be readily detected by Sarsat and Cospas satellites (see later), or by any aircraft monitoring 121.5 MHz or 243.0 MHz.

More modern ELT operate on a spot UHF frequency (460.025 MHz). These devices are much more sophisticated and also operate at a significantly higher power (5 W instead of the 150 mW commonly used at VHF). Unlike the simple amplitude modulation used with their VHF counterparts, 460 MHz ELT transmit digitally encoded data which incorporates a code that is unique to the aircraft that carries them.

Provided they have been properly maintained, most ELT are capable of continuous operation for up to 50 hours. It is important to note that ELT performance (and, in particular, the operational range and period for which the signal is maintained) may become seriously impaired when the batteries are out of date. For this reason, routine maintenance checks are essential and any ELT which contains outdated batteries should be considered unserviceable.

The different types of ELT are summarised in Table 7.1. These are distinguished by application and by the means of activation. Modern passenger aircraft may carry several different types of ELT. Figure 7.1 shows a typical example of the Type-W (water activated) survival ELT carried on a modern transport aircraft.

Most ELT in general aviation aircraft are of the automatic type. Fixed automatic units contain a crash activation sensor, or G-switch, which is designed to detect the deceleration characteristics of a crash and automatically activate the transmitter.

With current Sarsat and Cospas satellites now in orbit, ELT signals will usually be detected, within 90 minutes, and the appropriate search and rescue (SAR) agencies alerted. Military aircrew monitor 121.5 MHz or 243.0 MHz and they will also notify ATS or SAR agencies of any ELT transmissions they hear.

It is worth noting that the detection ranges for Type-W and Type-S ELT can be improved if the ELT is placed upright, with the antenna vertical, on the highest nearby point with any accessible metal surface acting as a ground plane. Doubling the height will increase the range by about 40%.

Table 7.1 Types of ELT

Type	*Class*	*Description*
A or AD	Automatic ejectable or automatic deployable	This type of ELT automatically ejects from the aircraft and is set in operation by inertia sensors when the aircraft is subjected to a crash deceleration force acting through the aircraft's flight axis. This type is expensive and is seldom used in general aviation.
F or AF	Fixed (non-ejectable) or automatic fixed	This type of ELT is fixed to the aircraft and is automatically set in operation by an inertia switch when the aircraft is subjected to crash deceleration forces acting in the aircraft's flight axis. The transmitter can be manually activated or deactivated and in some cases may be remotely controlled from the cockpit. Provision may also be made for recharging the ELT's batteries from the aircraft's electrical supply. Most general aviation aircraft use this ELT type, which must have the function switch placed to the ARM position for the unit to function automatically in a crash (see Figure 7.5).
AP	Automatic portable	This type of ELT is similar to Type-F or AF except that the antenna is integral to the unit for portable operation.
P	Personnel activated	This type of ELT has no fixed mounting and does not transmit automatically. Instead, a switch must be manually operated in order to activate or deactivate the ELT's transmitter.
W or S	Water activated or Survival	This type of ELT transmits automatically when immersed in water (see Figure 7.1). It is waterproof, floats and operates on the surface of the water. It has no fixed mounting and should be tethered to survivors or life rafts by means of the supplied cord.

7.2 Maintenance and testing of ELT

ELT should be regularly inspected in accordance with the manufacturer's recommendations. The ELT should be checked to ensure that it is secure, free of external corrosion, and that antenna connections are secure. It is also important to ensure that the ELT batteries have not reached their expiry date (refer to external label) and that only approved battery types are fitted.

Air testing normally involved first listening on the beacon's output frequency (e.g. 121.5 MHz), checking first that the ELT is not transmitting before activating the unit and then checking the radiated signal. Simple air tests between an aircraft and a ground station (or between two aircraft) can sometimes be sufficient to ensure that an ELT is functional; however, it is important to follow manufacturer's instructions when testing an ELT. Two-station air testing (in conjunction with a nearby ground station) is usually preferred because, due to the proximity of the transmitting and receiving antennae, a test carried out with the aircraft's own VHF receiver may not reveal a fault condition in which the ELT's RF output has become reduced.

To avoid unnecessary SAR missions, all accidental ELT activations should be reported to the appropriate authorities (e.g. the nearest rescue coordination centre) giving the location of the transmitter, and the time and duration of the accidental transmission. Promptly notifying the appropriate authorities of an accidental ELT transmission can be instrumental in preventing the launch of a search aircraft. Any testing of an ELT must be conducted only during the first five minutes of any UTC hour and restricted in duration to not more than five seconds.

Figure 7.1 Type-W ELT with attachment cord secured by water-soluble tape (the antenna has been removed)

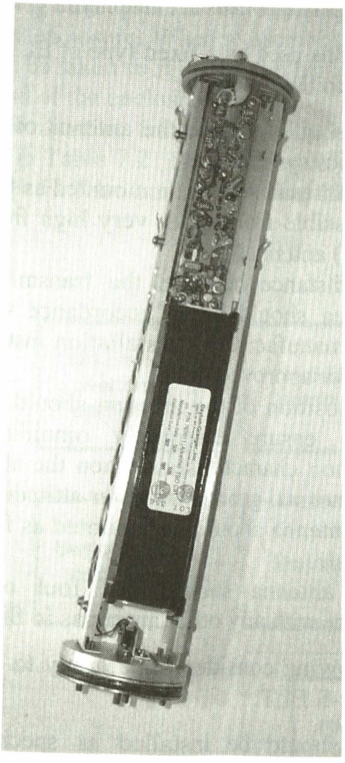

Figure 7.2 Interior view of the ELT shown in Figure 7.1. Note how the battery occupies approximately 50% of the internal volume

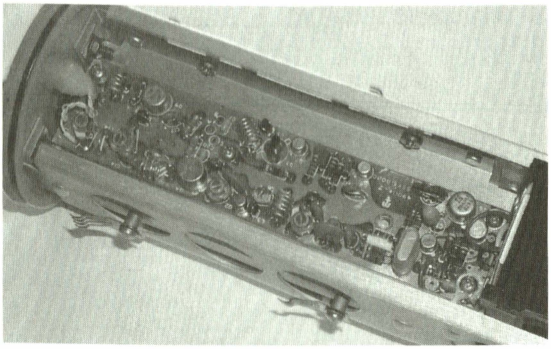

Figure 7.3 ELT transmitter and modulator printed circuit board (the crystal oscillator is located on the right with the dual-frequency output stages on the left)

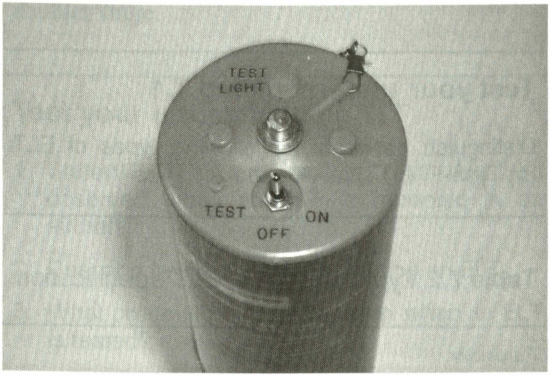

Figure 7.4 ELT test switch and test light (the antenna base connector is in the centre of the unit)

7.3 ELT mounting requirements

In order to safeguard the equipment and to ensure that it is available for operation should the need arise, various considerations should be observed when placing and mounting an ELT and its associated antenna system in an aircraft. The following requirements apply to Type-F, AF, AP ELT installations in fixed wing aircraft and rotorcraft:

1. When installed in a fixed wing aircraft, ELT should be mounted with its sensitive axis pointing in the direction of flight
2. When installed in a rotorcraft ELT should be mounted with its sensitive axis pointing

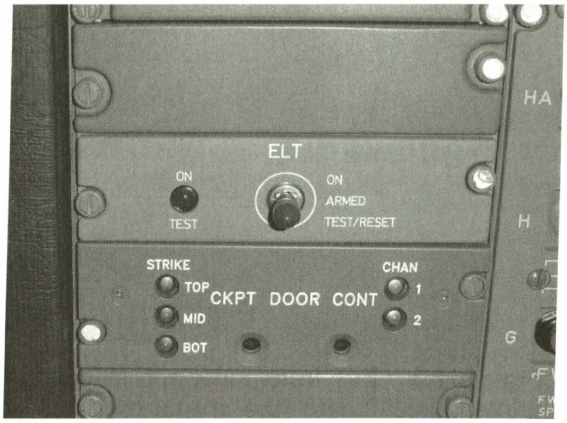

Figure 7.5 Type-AF ELT control panel (note the three switch positions marked ON, ARMED and TEST/RESET)

Test your understanding 7.1

Distinguish between the following types of ELT: (a) Type-F, (b) Type-AF, and (c) Type-W.

Table 7.2 Typical Type-AF ELT specification

Parameter	*Specification*
Operating frequencies	121.5 MHz, 243 MHz and 406.025 MHz
Frequency tolerance	±0.005% (121.5 MHz and 243 MHz); ±2 kHz (406.025 MHz)
RF output power	250 mW typical (121.5 MHz and 243 MHz); 5 W ±2 dB (406.025 MHz)
Pulse duration	10 ms
Activation	G-switch
Power source	Internal lithium battery
Battery life	5 years (including effects of monthly operational checks)
Beacon operating life	50 hours
Digital message repetition period (406.025 MHz only)	Every 50 s
Modulation	AM (121.5 MHz and 243 MHz); phase modulation (406.025 MHz)
Housing material	Aluminium alloy

approximately 45° downward from the normal forward direction of flight

3. ELT should be installed to withstand ultimate inertia forces of 10 g upward, 22.5 g downward, 45 g forward and 7.5 g sideways
4. The location chosen for the ELT should be sufficiently free from vibration to prevent involuntary activation of the transmitter
5. ELT should be located and mounted so as to minimise the probability of damage to the transmitter and antenna by fire or crushing as a result of a crash impact
6. ELT should be accessible for manual activation and deactivation. If it is equipped with an antenna for portable operation, the ELT should be easily detachable from inside the aircraft
7. The external surface of the aircraft should be marked to indicate the location of the ELT
8. Where an ELT has provision for remote operation it is important to ensure that appropriate notices are displayed.

The antenna used by a fixed type of ELT should conform to the following:

1. ELT should not use the antenna of another avionics system
2. ELT antenna should be mounted as far away as possible from other very high frequency (VHF) antennas
3. The distance between the transmitter and antenna should be in accordance with the ELT manufacturer's installation instructions or other approved data
4. The position of the antenna should be such as to ensure essentially omnidirectional radiation characteristics when the aircraft is in its normal ground or water attitude
5. The antenna should be mounted as far aft as possible
6. ELT antenna should not foul or make contact with any other antennas in flight.

The following considerations apply to Type-W and Type-S ELT:

1. ELT should be installed as specified for Type-F but with a means of quick release, and located as near to an exit as practicable without being an obstruction or hazard to aircraft occupants

2. Where the appropriate regulations require the carriage of a single ELT of Type-W or Type-S, the ELT should be readily accessible to passengers and crew
3. Where the appropriate regulations require the carriage of a second Type-W or Type-S ELT, that ELT should be either located near a life raft pack, or attached to a life raft in such a way that it will be available or retrievable when the raft is inflated
4. An ELT fitted with a lithium or magnesium battery must not be packed inside a life raft in an aircraft.

7.4 Typical ELT

Figures 7.1 to 7.4 show the external and internal construction of a basic Type-W ELT. The unit is hermetically sealed at each end in order to prevent the ingress of water. The procedure for disassembling the ELT usually involves withdrawing the unit from one end of the cylindrical enclosure. When reassembling an ELT care must be taken to reinstate the hermetic seals at each end of the enclosure.

The specification for a modern Type-AF ELT is shown in Table 7.2. This unit provides outputs on all three ELT beacon frequencies; 121.5 MHz, 243 MHz, and 406.025 MHz. The ELT uses amplitude modulation (AM) on the two VHF frequencies (121.5 MHz and 243 MHz) and phase modulation (PM) on the UHF frequency (406.025 MHz). The AM modulating signal consists of an audio tone that sweeps downwards from 1.5 kHz to 500 Hz with three sweeps every second. The modulation depth is greater than 85%.

The block schematic diagram for a simple Type-W ELT is shown in Figure 7.6. The supply is connected by means of a water switch (not shown in Figure 7.6). The unit shown in Figure 7.6 only provides outputs at VHF (121.5 MHz and 243 MHz). These two frequencies are harmonically related which makes it possible to generate the 243 MHz signal using a frequency doubler stage.

Test your understanding 7.2

1. State THREE requirements that must be observed when an ELT is mounted in an aircraft.
2. Describe two methods of activating an ELT.
3. What precautions must be taken when an ELT is tested?

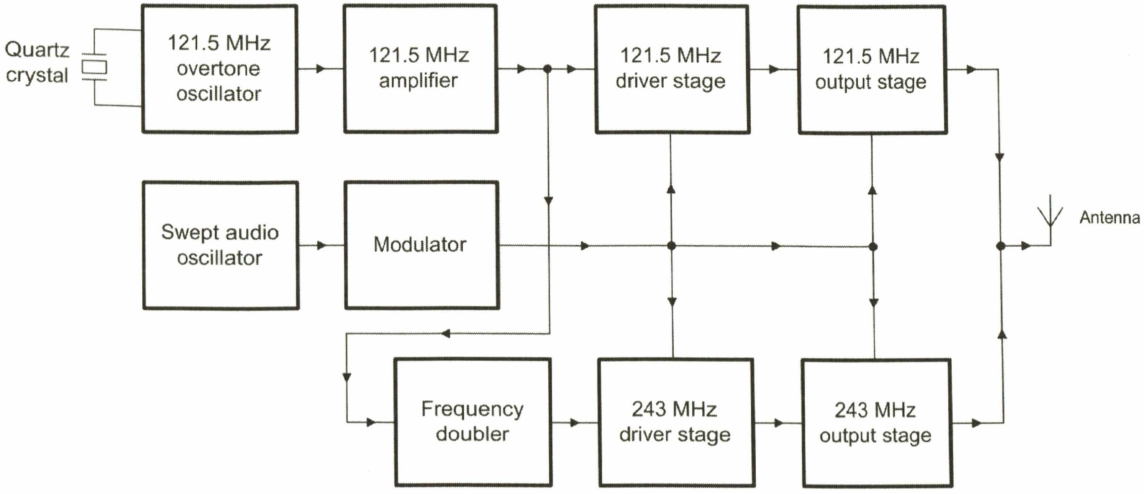

Figure 7.6 Block schematic diagram for a Type-W ELT

7.5 Cospas–Sarsat satellites

Cospas–Sarsat is a satellite system designed to supply alert and location information to assist search and rescue operations. The Russian Cospas stands for 'space system for the search of vessels in distress' whilst Sarsat stands for 'search and rescue satellite-aided tracking'.

The system uses satellites and ground stations to detect and locate signals from ELT operating at frequencies of 121.5 MHz, 243 MHz and/or 406 MHz. The system provides worldwide support to organizations responsible for air, sea or ground SAR operations.

The basic configuration of the Cospas–Sarsat system features:

- ELT that transmit VHF and/or UHF signals in case of emergency
- Instruments on board geostationary and low-orbiting satellites detecting signals transmitted by the ELT
- **Local user terminals** (LUT), which receive and process signals transmitted via the satellite downlink to generate distress alerts
- **Mission control centres** (MCC) which receive alerts from LUTs and send them to a **Rescue coordination centre** (RCC)
- **Search and rescue** (SAR) units.

There are two Cospas–Sarsat systems. One operates at 121.5 MHz (VHF) whilst the other operates at 406 MHz (UHF). The Cospas–Sarsat 121.5 MHz system uses low earth orbit (LEO) polar-orbiting satellites together with associated ground receiving stations. The basic system is shown in Figure 7.7.

The signals produced by ELT beacons are received and relayed by Cospas–Sarsat LEO-SAR satellites to Cospas–Sarsat LUTs that process the signals to determine the location of the ELT. The computed position of the ELT transmitter is relayed via an MCC to the appropriate RCC or **search and rescue point of contact** (SPOC).

The Cospas–Sarsat system uses Doppler location techniques (using the relative motion between the satellite and the distress beacon) to accurately locate the ELT. The carrier frequency transmitted by the ELT is reasonably stable during the period of mutual beacon-satellite visibility. Doppler performance is enhanced due to the low-altitude near-polar orbit used by the Cospas–Sarsat satellites. However, despite this it is important to note that the location accuracy of the 121.5 MHz system is not as good as the accuracy that can be achieved with the 406 MHz system. The low altitude orbit also makes it possible for the system to operate with very low uplink power levels.

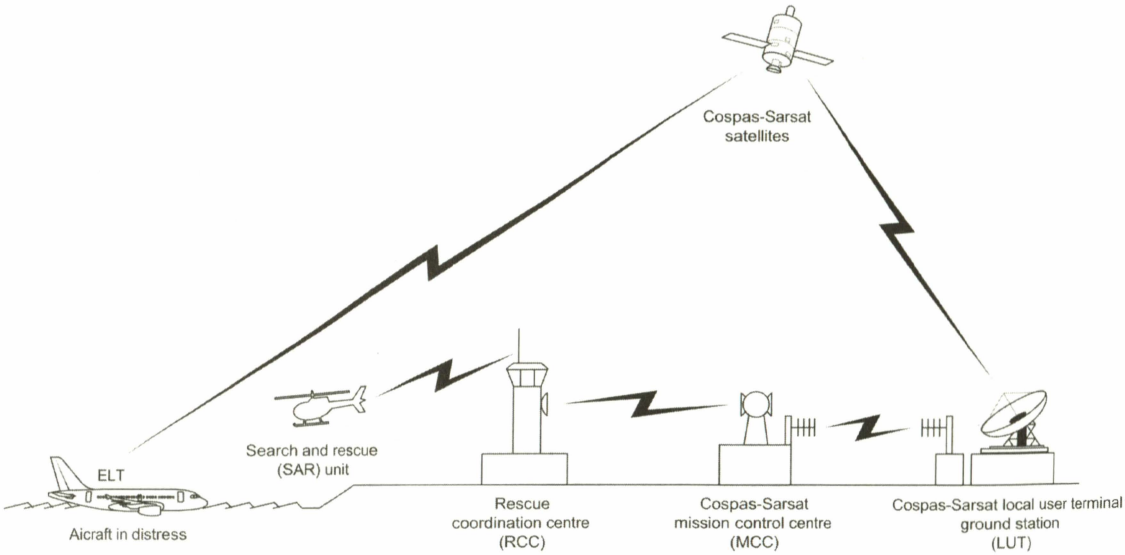

Figure 7.7 The Cospas–Sarsat system in operation

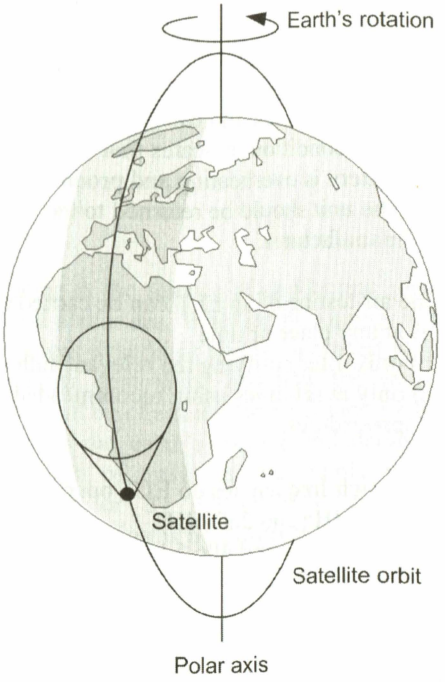

Figure 7.8 Polar orbit for a low altitude earth orbit (LEO) search and rescue (SAR) satellite

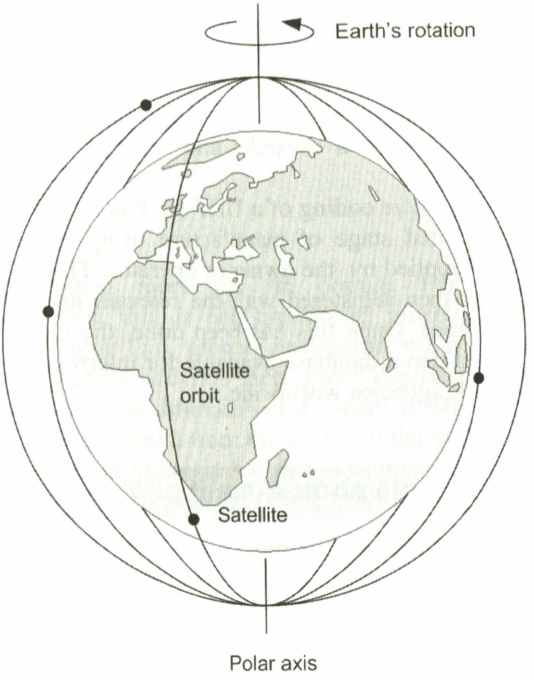

Figure 7.9 The constellation of four LEO–SAR satellites

A near polar orbit could provide full global coverage but 121.5 MHz can only be produced if the uplink signals from the ELT are actually received by an LUT. This constraint of the 121.5 MHz system limits the useful coverage to a geographic area of about 3,000 km radius around each LUT. In this region, the satellite can 'see' both the ELT and the LUT.

Figure 7.8 shows the polar orbit of a single satellite. The path (or 'orbital plane') of the satellite remains fixed, while the earth rotates underneath. At most, it takes only one half rotation of the earth (i.e. 12 hours) for any location to pass under the orbital plane. With a second satellite, having an orbital plane at right angles to the first, only one quarter of a rotation is required, or six hours maximum. Similarly, as more satellites orbit the earth in different planes, the waiting time is further reduced.

The complete Cospas–Sarsat system uses four satellites as shown in Figure 7.9. The system provides a typical waiting time of less than one hour at mid-latitudes. However, users of the 121.5 MHz system have to wait for a satellite pass which provides for a minimum of four minutes, simultaneous visibility of an ELT and an LUT. This additional constraint may increase the waiting time to several hours if the transmitting beacon is at the edge of the LUT coverage area. The Doppler location provides two positions for each beacon: the true position and its mirror image relative to the satellite ground track. In the case of 121.5 MHz beacons, a second pass is usually required to resolve the ambiguity.

Sarsat satellites are also equipped with 243 MHz repeaters which allow the detection and location of 243 MHz distress beacons. The operation of the 243 MHz system is identical to the 121.5 MHz system except for the smaller number of satellites available.

The Cospas–Sarsat 406 MHz System is much more sophisticated and involves both orbiting and geostationary satellites. The use of 406 MHz beacons with digitally encoded data allows unique beacon identification.

In order to provide positive aircraft identification, it is essential that 406 MHz ELT are registered in a recognised ELT database

accessible to search and rescue authorities. The information held in the database includes data on the ELT, its owner, and the aircraft on which the ELT is mounted. This information can be invaluable in a search and rescue (SAR) operation.

The unique coding of a UHF ELT is imbedded in the final stage of manufacture using aircraft data supplied by the owner or operator. The ELT data is then registered with the relevant national authorities. Once this has been done, the data is entered into a database available for interrogation by SAR agencies worldwide.

7.6 Multiple choice questions

1. ELT transmissions use:
   (a) Morse code and high-power RF at HF
   (b) pulses of acoustic waves at 37.5 kHz
   (c) low-power RF at VHF or UHF.

2. A Type-P ELT derives its power from:
   (a) aircraft batteries
   (b) internal batteries
   (c) a small hand-operated generator.

3. Transmission from an ELT is usually initially detected by:
   (a) low-flying aircraft
   (b) one or more ground stations
   (c) a satellite.

4. The operational state of an ELT is tested using:
   (a) a test switch and indicator lamp
   (b) immersion in a water tank for a short period
   (c) checking battery voltage and charging current.

5. A Type-W ELT needs checking. What is the first stage in the procedure?
   (a) Inspect and perform a load test on the battery
   (b) Open the outer case and inspect the hermetic seal
   (c) Read the label on the ELT in order to determine the unit's expiry date.

6. If bubbles appear when an ELT is immersed in a tank of water, which one of the following statements is correct?
   (a) This is normal and can be ignored
   (b) This condition indicates that the internal battery is overheating and producing gas
   (c) The unit should be returned to the manufacturer.

7. The air testing of an ELT can be carried out:
   (a) at any place or time
   (b) only after notifying the relevant authorities
   (c) only at set times using recommended procedures.

8. On which frequencies do ELT operate?
   (a) 125 MHz and 250 MHz
   (b) 122.5 MHz and 406.5 MHz
   (c) 121.5 MHz and 406.025 MHz

9. A Type-W ELT is activated by:
   (a) a member of the crew
   (b) immersion in water
   (c) a high G-force caused by deceleration.

10. The location accuracy of a satellite-based beacon locator system is:
    (a) better on 121.5 MHz than on 406 MHz
    (b) better on 406 MHz than on 121.5 MHz
    (c) the same on 121.5 MHz as on 406 MHz.

11. An ELT fitted with a lithium battery is:
    (a) safe for packing in a life raft
    (b) unsafe for packing in a life raft
    (c) not suitable for use with a Type-F ELT.

12. A Type-W or Type-S ELT will work better when the antenna is:
    (a) held upright
    (b) slanted downwards slightly
    (c) carefully aligned with the horizontal.

13. The satellites used by the Cospas–Sarsat 121.5 MHz system are:
    (a) in high earth orbit
    (b) in low earth orbit
    (c) geostationary.